Washington County Water District

WATER SYSTEM IMPROVEMENTS - 2015

CONTRACT DRAWINGS

JUNE 2016

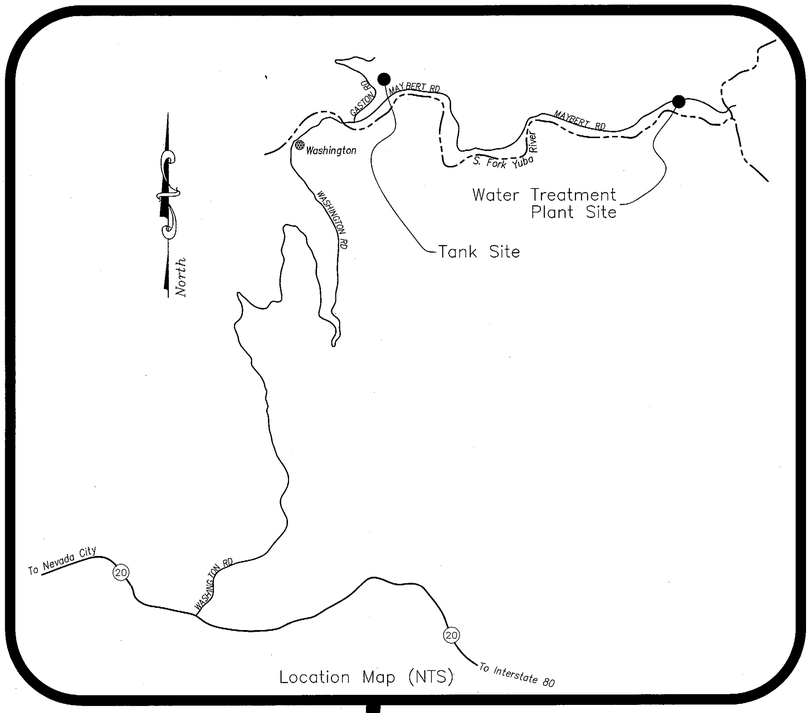

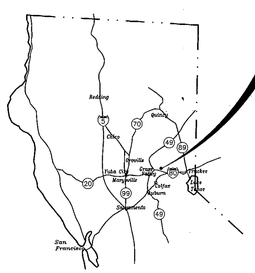

LOCATION & VICINITY MAPS OF PROJECT AREA

SHEET INDEX

1. G1 COVER SHEET
2. C1 EXISTING PLANT LAYOUT
3. C2 REVISED PLANT LAYOUT
4. M1 PUMP SYSTEM MECHANICAL
5. D1 WTP DETAILS 1
6. D2 WTP DETAILS 2
7. P1 CONTACT PIPLEINE
8. P2 CONTACT PIPELINE DETAILS
9. T1 EXISTING STORAGE TANK ACCESS AND UTILITIES
10. T2 STORAGE TANK DETAILS
11. E1 ELECTRICAL SYM., ABBREV., BLOCK DIAGRAMS & NOTES
12. E2 ELECTRICAL SITE PLAN AND CONDUIT SCHEDULE
13. E3 ELECTRICAL BUILDING PLANS
14. E4 SINGLE LINE DIAGRAM, ELEVATION AND LOAD CALCS
15. E5 CONTROL WIRING AND BLOCK DIAGRAMS
16. E6 STORAGE TANK PLANS ELECTRICAL, ELEVATIONS AND DIAGRAMS
17. E7 ELECTRICAL DETAILS 1
18. E8 ELECTRICAL DETAILS 2

ABBREVIATIONS:

A.B.	AGGREGATE BASE	MJ	MECHANICAL JOINT
A.C.	ASPHALT CONCRETE PAVEMENT	MIN	MINIMUM
ASPH.	ASPHALT	N	NORTH
APPROX.	APPROXIMATE	(N)	NEW
ARV	AIR RELEASE VALVE	OHE	OVERHEAD ELECTRIC
BC	BEGIN CURVE	OHU	OVERHEAD UTILITY
BFV	BUTTERFLY VALVE	PC	POINT OF CURVE OR PROPERTY CORNER
BM	BENCH MARK	PCC	PORTLAND CEMENT CONCRETE
BVC	BEGINNING VERTICAL CURVE	PE	PLAIN END
℄	CENTER LINE	PERF	PERFORATED
CMP	CORRUGATED METAL PIPE	PI	POINT OF INTERSECTION
CO	CLEAN OUT	P/L	PROPERTY LINE
CONC	CONCRETE	PO	PUSH ON JOINT
CONST	CONSTRUCT	POT	POINT OF TANGENT
CPLG	COUPLING	PP	POWER POLE OR PERFORATED PIPE
DET	DETAIL	PT	POINT OF TANGENCY
DI	DROP INLET	PVC	POLYVINYL CHLORIDE PIPE
DIP	DUCTILE IRON PIPE	PVI	POINT OF VERTICAL INTERSECTION
DR	DRIVE	R	RADIUS
D.S.	DOUBLE SERVICE	RC	RELATIVE COMPACTION
E	EAST OR ELECTRICAL	RB	REBAR
(E)	EXISTING	RET	RETAINING
ELEV.	ELEVATION	RFCA	RESTRAINED FLANGED COUPLING ADAPTER
E.P.	EDGE OF PAVEMENT	RMJ	RESTRAINED MECHANICAL JOINT
ES	EDGE OF SHOULDER	RPO	RESTRAINED PUSH ON JOINT
EX.	EXISTING	RR	RAILROAD
EVC	END OF VERTICAL CURVE	R/W (ROW)	RIGHT OF WAY
FCA	FLANGED COUPLING ADAPTER	S	SOUTH OR SLOPE
FG	FINISH GRADE	SD	STORM DRAIN
FH	FIRE HYDRANT	SDMH	STORM DRAIN MANHOLE
FLG	FLANGE	SHT	SHEET
FRP	FIBERGLASS REINFORCED PLASTIC	SGL.S.	SINGLE SERVICE
G	GAS	SS	SANITARY SEWER
GR	GRATE	STA	STATION
GB	GRADE BREAK	STD	STANDARD
GV	GATE VALVE	SSMH	SANITARY SEWER MANHOLE
H	HORIZONTAL	SW	SIDEWALK
HDPE	HIGH DENSITY POLYETHYLENE	T	TELEPHONE
I.E.	INVERT ELEVATION	TBC	TOP BACK OF CURB
I.P.	IRON PIPE	TELE	TELEPHONE
INV	INVERT ELEVATION	TRANS	TRANSFORMER
L.F.	LINEAR FOOT	(TYP)	TYPICAL
LPG	LIQUEFIED PETROLEUM GAS	TP	TELEPHONE POLE
LS	LUMP SUM	UGE	UNDERGROUND ELECTRIC
MAX	MAXIMUM	V	VERTICAL
MCA	MECHANICAL COUPLING ADAPTER	W	WEST OR WATER
(MH)	EXISTING MANHOLE	W/	WITH
MHW	MEAN HIGH WATER	WV	WATER VALVE
		WTP	WATER TREATMENT PLANT

Prepared Under Direction Of:

Keith S. Knibb

REGISTERED PROFESSIONAL ENGINEER KEITH S KNIBB No. C 51290 Exp. 3-31-18 CIVIL STATE OF CALIFORNIA

6/08/16
Date

Approved By:

William Falconi, District Engineer
Washington County Water District

24 August 2016
Date

Sauers Engineering, Inc.
Civil & Environmental Engineers
440A Lower Grass Valley Road
Nevada City, CA 95959
(530) 265-8021

REV	DATE	REVISIONS	INITIAL

WATER SYSTEM IMPROVEMENTS - 2015

COVER SHEET

WASHINGTON COUNTY WATER DISTRICT

NEVADA COUNTY CALIFORNIA

Sauers Engineering, Inc.
Civil & Environmental Engineers
440A Lower Grass Valley Rd., Nevada City, CA 95959 (530) 265-6021

BAR IS ONE INCH ON ORIG. DRAWING
IF BAR DOES NOT MEASURE ONE INCH, ADJUST SCALES ACCORDINGLY

PROJECT NUMBER:	14-001-02
DESIGN BY:	KSK
DRAFTING BY:	KEM
CHECKED BY:	DDM

FILE PATH: sei\washington\2015wtp&tank

DATE: JUNE 2016

SCALES:
HORIZONTAL
VERTICAL

G1

SHEET: 1 of 18

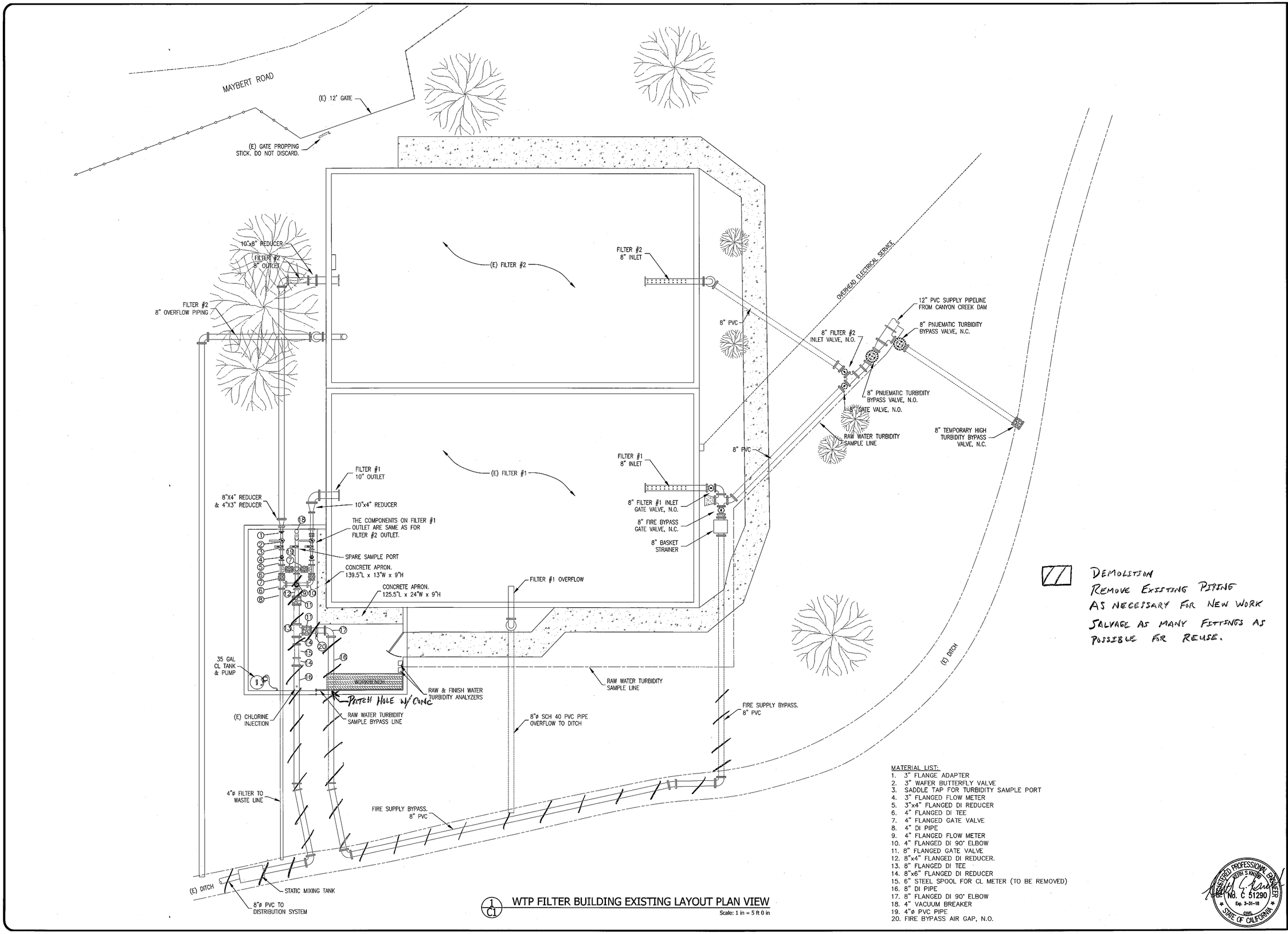

1 / C1 WTP FILTER BUILDING EXISTING LAYOUT PLAN VIEW

Scale: 1 in = 5 ft 0 in

DEMOLITION
REMOVE EXISTING PIPING AS NECESSARY FOR NEW WORK
SALVAGE AS MANY FITTINGS AS POSSIBLE FOR REUSE.

MATERIAL LIST:

1. 3" FLANGE ADAPTER
2. 3" WAFER BUTTERFLY VALVE
3. SADDLE TAP FOR TURBIDITY SAMPLE PORT
4. 3" FLANGED FLOW METER
5. 3"x4" FLANGED DI REDUCER
6. 4" FLANGED DI TEE
7. 4" FLANGED GATE VALVE
8. 4" DI PIPE
9. 4" FLANGED FLOW METER
10. 4" FLANGED DI 90° ELBOW
11. 8" FLANGED GATE VALVE
12. 8"x4" FLANGED DI REDUCER.
13. 8" FLANGED DI TEE
14. 8"x6" FLANGED DI REDUCER
15. 6" STEEL SPOOL FOR CL METER (TO BE REMOVED)
16. 8" DI PIPE
17. 8" FLANGED DI 90° ELBOW
18. 4" VACUUM BREAKER
19. 4"ø PVC PIPE
20. FIRE BYPASS AIR GAP, N.O.

REGISTERED PROFESSIONAL ENGINEER KEITH S KNIBB No. C 51290 Exp. 3-31-18 CIVIL STATE OF CALIFORNIA

REV	DATE	REVISIONS	INITIAL
8/24/18		BID SET	

WATER SYSTEM IMPROVEMENTS - 2015

EXISTING WTP LAYOUT

WASHINGTON COUNTY WATER DISTRICT

NEVADA COUNTY CALIFORNIA

Sauers Engineering, Inc.
Civil & Environmental Engineers
440A Lower Grass Valley Rd., Nevada City, CA 95959 (530) 265-8021

0 1
BAR IS ONE INCH ON ORIG. DRAWING
IF BAR DOES NOT MEASURE ONE INCH, ADJUST SCALES ACCORDINGLY

PROJECT NUMBER:	14-001-02
DESIGN BY:	KSK
DRAFTING BY:	KEM
CHECKED BY:	DDM

FILE PATH: sei\washington\2015wtp&tank

DATE: JUNE 2016

SCALES: HORIZONTAL VERTICAL

C1

SHEET: 2 of 18

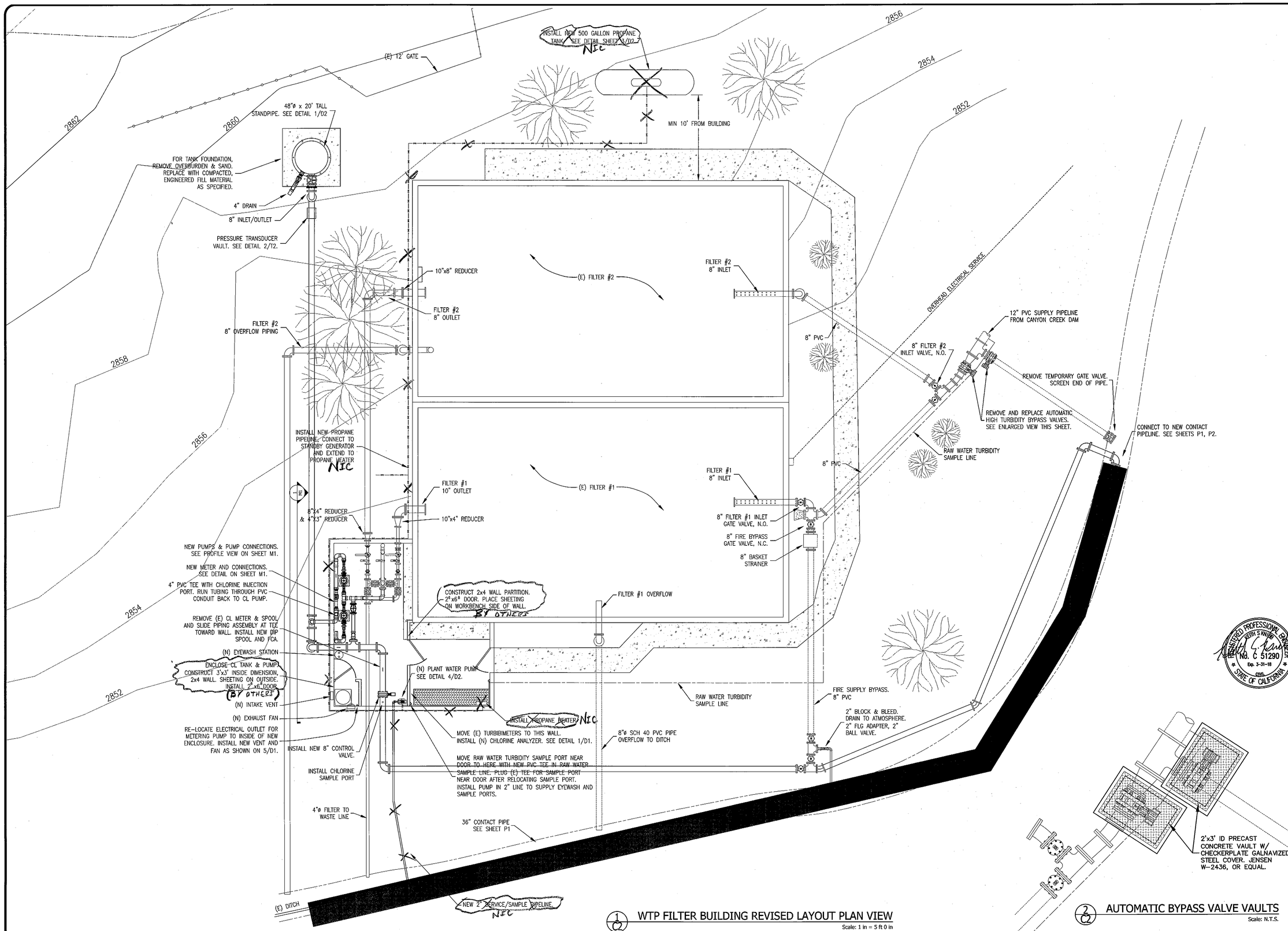

1/C2 WTP FILTER BUILDING REVISED LAYOUT PLAN VIEW

Scale: 1 in = 5 ft 0 in

2/C2 AUTOMATIC BYPASS VALVE VAULTS

Scale: N.T.S.

REV	DATE	REVISIONS	INITIAL
8	8/24/16	BID SET	

WATER SYSTEM IMPROVEMENTS - 2015

REVISED WTP LAYOUT

WASHINGTON COUNTY WATER DISTRICT

NEVADA COUNTY CALIFORNIA

REGISTERED PROFESSIONAL ENGINEER KEITH S KNIBB No. C 51290 Exp. 3-31-18 CIVIL STATE OF CALIFORNIA

Sauers Engineering, Inc.
Civil & Environmental Engineers
440A Lower Grass Valley Rd., Nevada City, CA 95959 (530) 265-8021

0 1

BAR IS ONE INCH ON ORIG. DRAWING IF BAR DOES NOT MEASURE ONE INCH, ADJUST SCALES ACCORDINGLY

PROJECT NUMBER:	14-001-02
DESIGN BY:	KSK
DRAFTING BY:	KEM
CHECKED BY:	DDM

FILE PATH: seiwashington\2015wtp&tank

DATE: JUNE 2016

SCALES:

HORIZONTAL

VERTICAL

C2

SHEET: 3 of 18

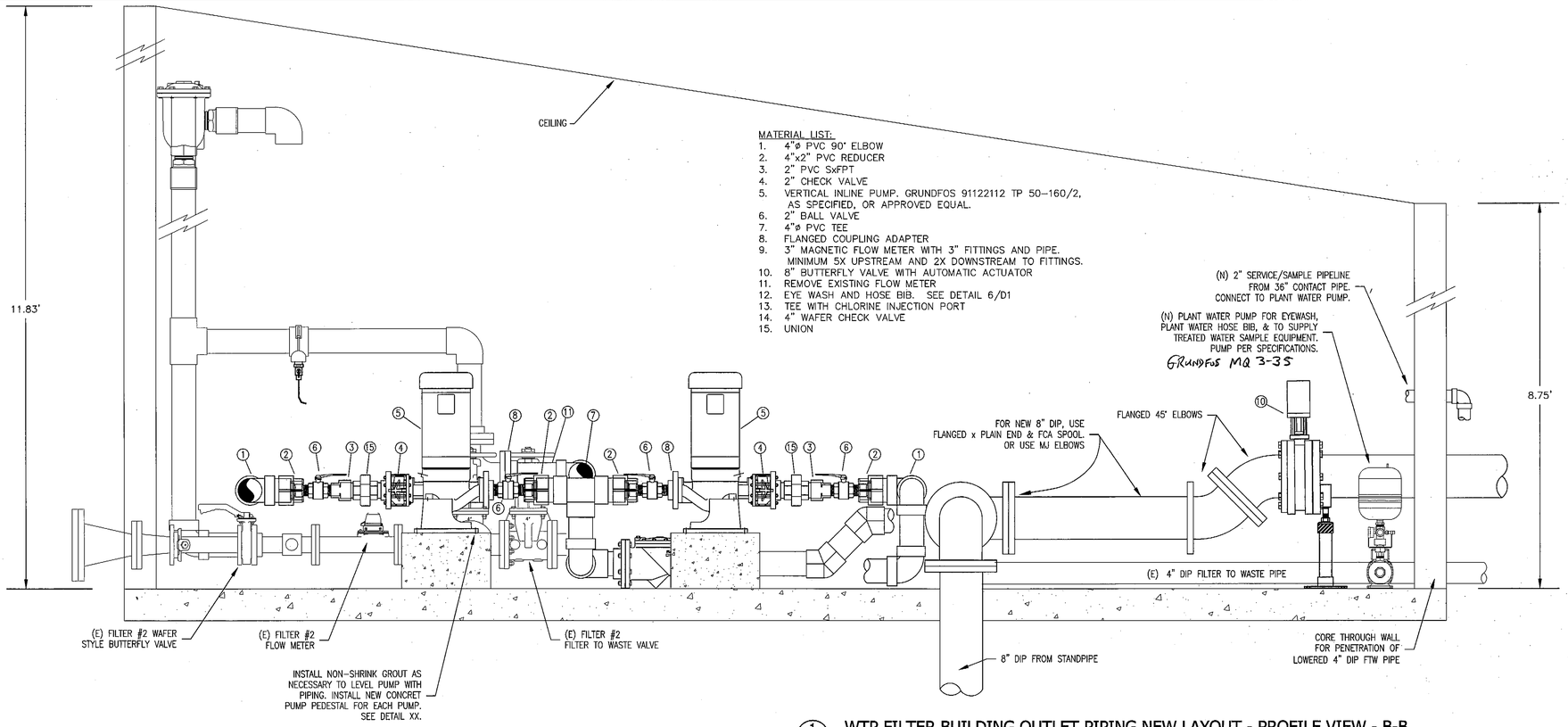

MATERIAL LIST:

1. 4"ø PVC 90° ELBOW
2. 4"x2" PVC REDUCER
3. 2" PVC SxFPT
4. 2" CHECK VALVE
5. VERTICAL INLINE PUMP. GRUNDFOS 91122112 TP 50-160/2, AS SPECIFIED, OR APPROVED EQUAL.
6. 2" BALL VALVE
7. 4"ø PVC TEE
8. FLANGED COUPLING ADAPTER
9. 3" MAGNETIC FLOW METER WITH 3" FITTINGS AND PIPE. MINIMUM 5X UPSTREAM AND 2X DOWNSTREAM TO FITTINGS.
10. 8" BUTTERFLY VALVE WITH AUTOMATIC ACTUATOR
11. REMOVE EXISTING FLOW METER
12. EYE WASH AND HOSE BIB. SEE DETAIL 6/D1
13. TEE WITH CHLORINE INJECTION PORT
14. 4" WAFER CHECK VALVE
15. UNION

1/M1 WTP FILTER BUILDING OUTLET PIPING NEW LAYOUT - PROFILE VIEW - B-B

Scale: 1 in = 1 ft 0 in

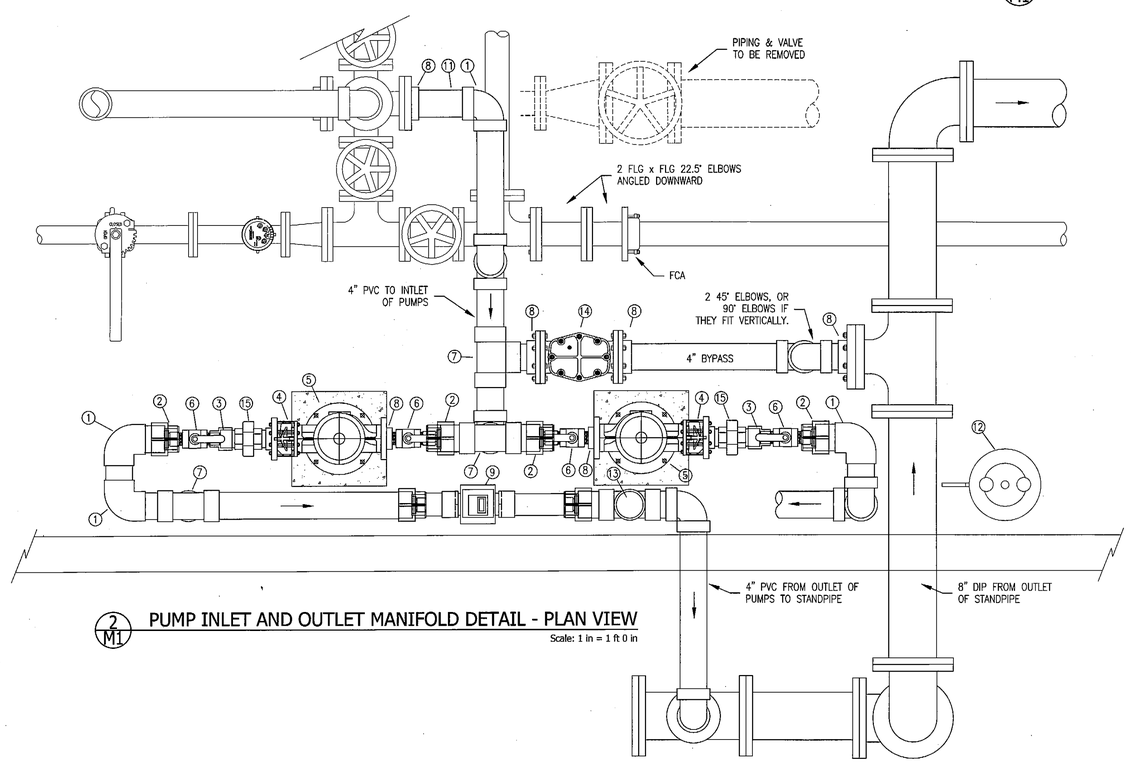

2/M1 PUMP INLET AND OUTLET MANIFOLD DETAIL - PLAN VIEW

Scale: 1 in = 1 ft 0 in

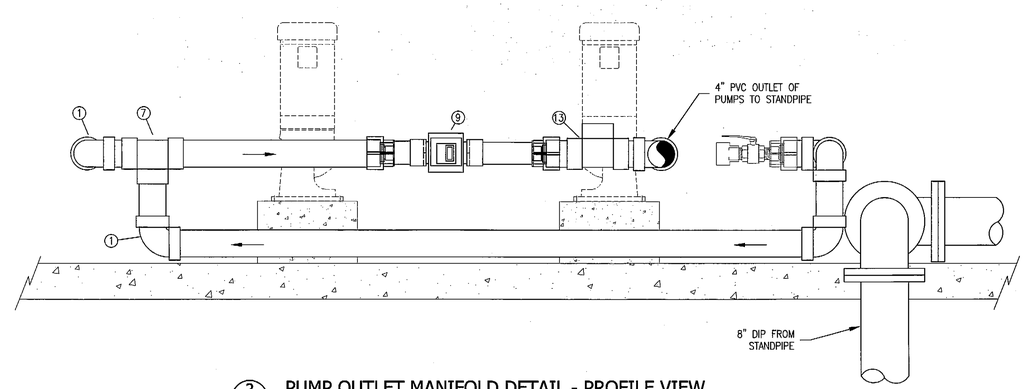

3/M1 PUMP OUTLET MANIFOLD DETAIL - PROFILE VIEW

Scale: 1 in = 1 ft 0 in

REGISTERED PROFESSIONAL ENGINEER KEITH S KIRBY No. C 51290 Exp. 3-31-18 CIVIL STATE OF CALIFORNIA

REV	DATE	REVISIONS	INITIAL
	8-29-16	BID SET	

WATER SYSTEM IMPROVEMENTS - 2015

PUMP SYSTEM MECHANICAL

WASHINGTON COUNTY WATER DISTRICT

NEVADA COUNTY CALIFORNIA

Sauers Engineering, Inc.
Civil & Environmental Engineers
440A Lower Grass Valley Rd., Nevada City, CA 95959 (530) 265-6021

0 1
BAR IS ONE INCH ON ORIG. DRAWING IF BAR DOES NOT MEASURE ONE INCH, ADJUST SCALES ACCORDINGLY

PROJECT NUMBER:	14-001-02
DESIGN BY:	KSK
DRAFTING BY:	KEM
CHECKED BY:	DDM

FILE PATH: sei\washington\2015wtp&tank

DATE: JUNE 2016

SCALES:
HORIZONTAL
VERTICAL

M1

SHEET: 4 of 18

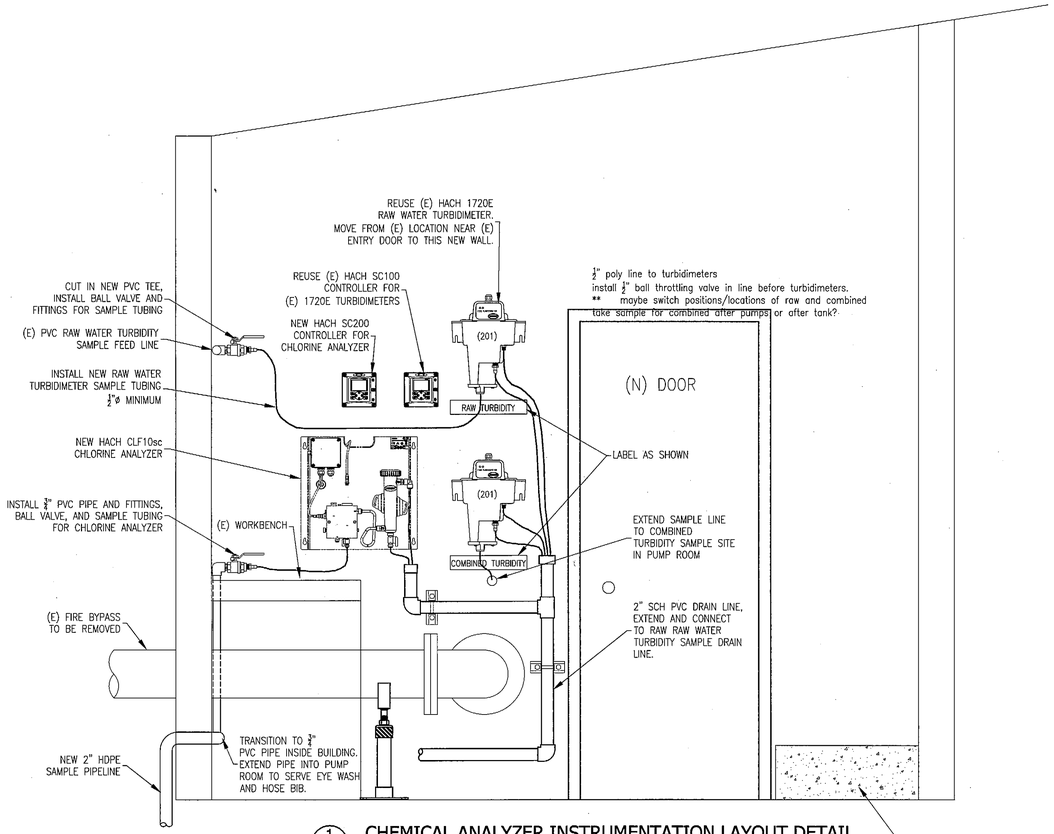

1 D1 CHEMICAL ANALYZER INSTRUMENTATION LAYOUT DETAIL

Scale: 1 in = 1 ft

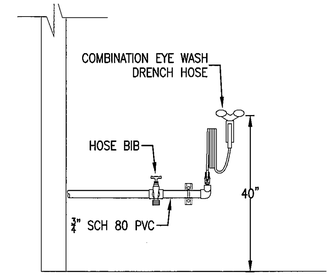

6 D1 EYE WASH/HOSE BIB DETAIL

Scale: N.T.S

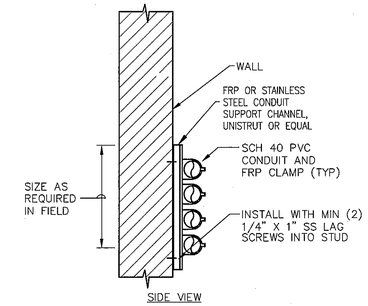

3 D1 POLY TUBING CONDUIT MOUNTING DETAIL

Scale: N.T.S

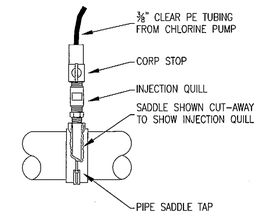

4 D1 CHLORINE INJECTION DETAIL

Scale: N.T.S

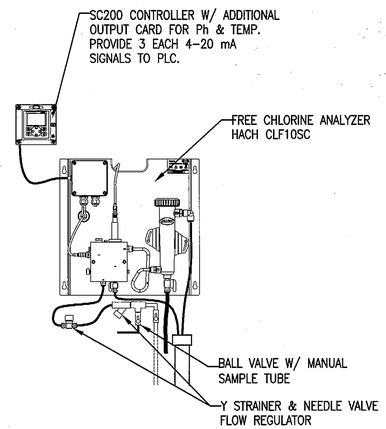

6 D1 CHLORINE ANALYZER DETAIL

Scale: N.T.S

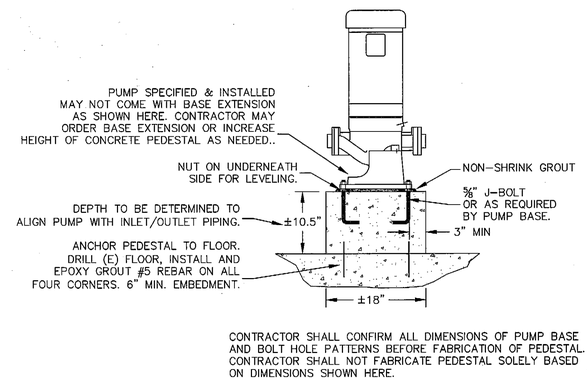

CONTRACTOR SHALL CONFIRM ALL DIMENSIONS OF PUMP BASE AND BOLT HOLE PATTERNS BEFORE FABRICATION OF PEDESTAL. CONTRACTOR SHALL NOT FABRICATE PEDESTAL SOLELY BASED ON DIMENSIONS SHOWN HERE.

6 D1 PUMP PEDESTAL DETAIL

Scale: N.T.S

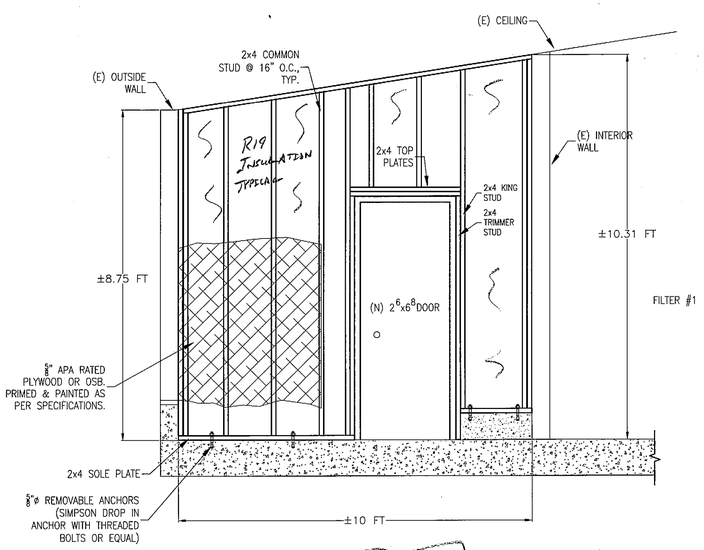

2 D1 DIVIDING WALL DETAIL

Scale: 1 in = 2 FT

BY OTHERS

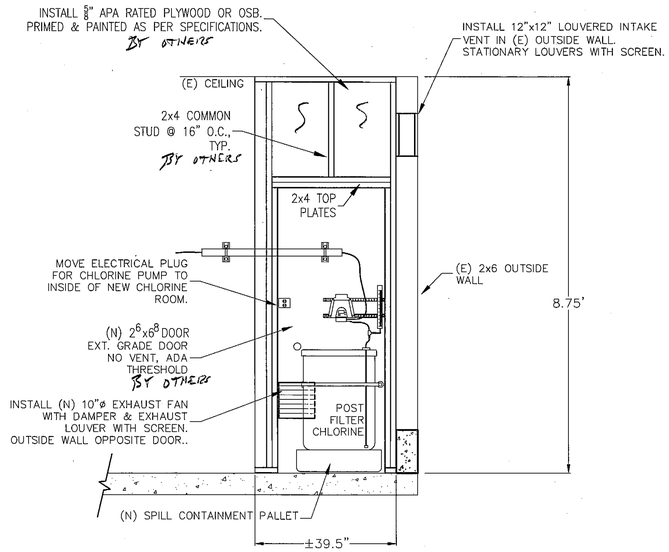

ENCLOSURE WALLS AND DOOR BY OTHERS

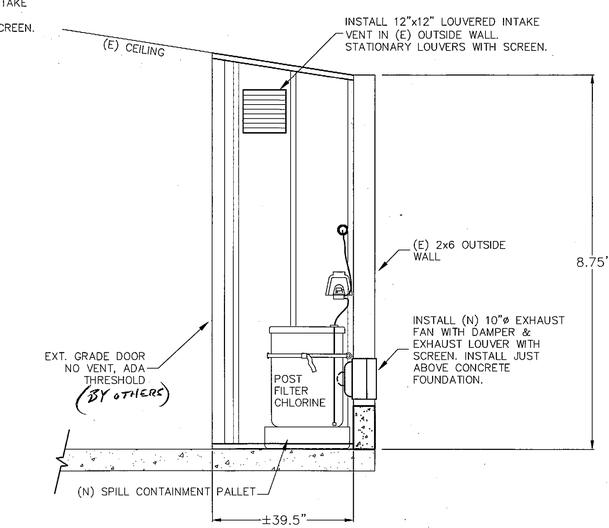

5 D1 CHLORINE TANK & PUMP ENCLOSURE DETAIL

Scale: 1 in = 1 ft 0 in

REGISTERED PROFESSIONAL ENGINEER KEITH S KEMBLE No. C 51290 Exp. 3-31-18 CIVIL STATE OF CALIFORNIA

REV	DATE	REVISIONS	INITIAL
	8/24/16	BID SET	

WATER SYSTEM IMPROVEMENTS - 2015

DETAILS - 1

WASHINGTON COUNTY WATER DISTRICT

NEVADA COUNTY CALIFORNIA

Sauers Engineering, Inc.
Civil & Environmental Engineers
440A Lower Grass Valley Rd., Nevada City, CA 95959 (530) 265-8021

0 1
BAR IS ONE INCH ON ORIG. DRAWING
IF BAR DOES NOT MEASURE ONE INCH, ADJUST SCALES ACCORDINGLY

PROJECT NUMBER:	14-001-02
DESIGN BY:	KSK
DRAFTING BY:	KEM
CHECKED BY:	DDM

FILE PATH: sei\washington\2015wtp&tank

DATE: JUNE 2016

SCALES: HORIZONTAL / VERTICAL

D1

SHEET: 5 of 18

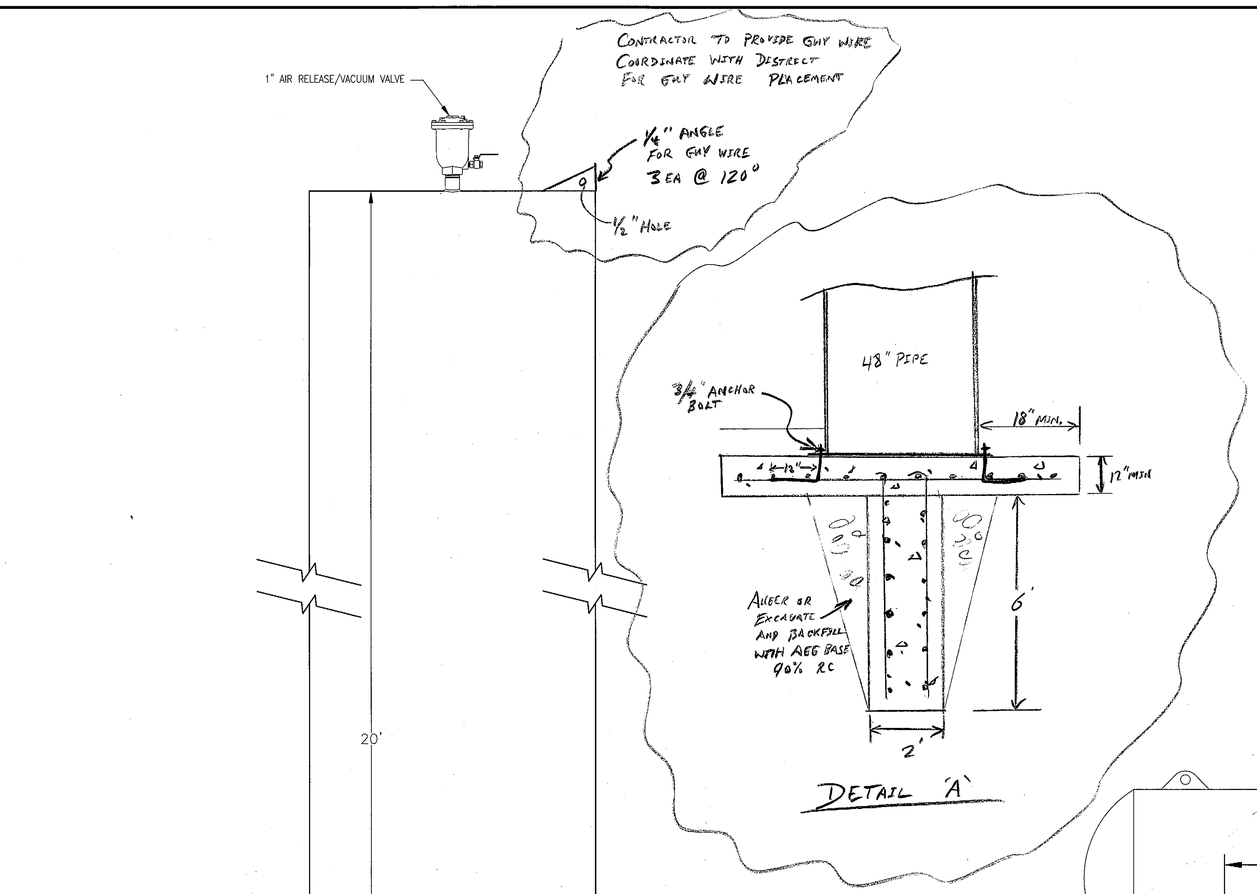

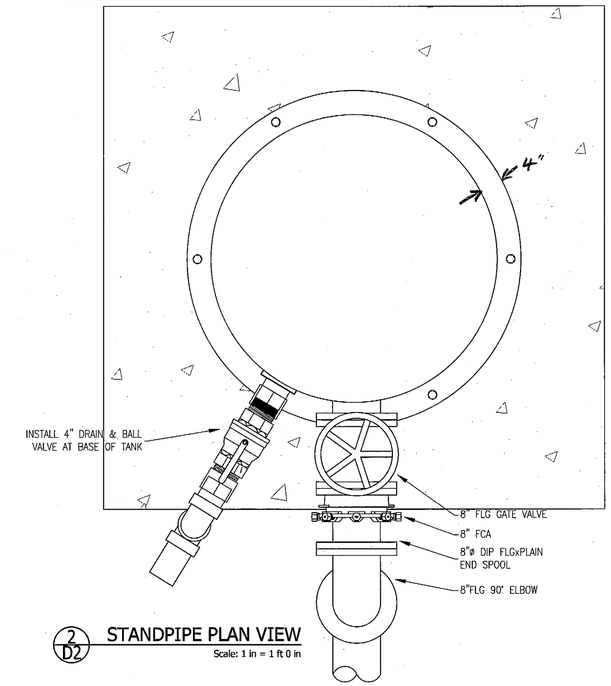

2 D2 STANDPIPE PLAN VIEW

Scale: 1 in = 1 ft 0 in

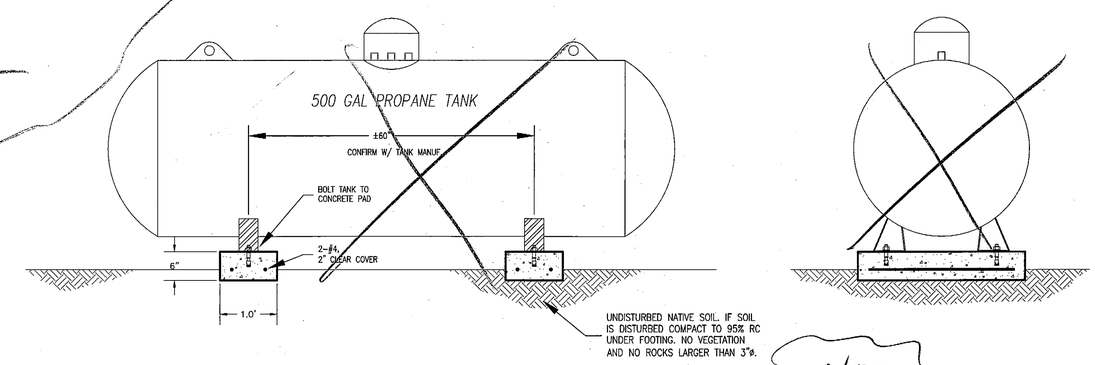

3 D2 PROPANE TANK FOOTING DETAILS

Scale: 1/2 in = 1 ft 0 in

NIC

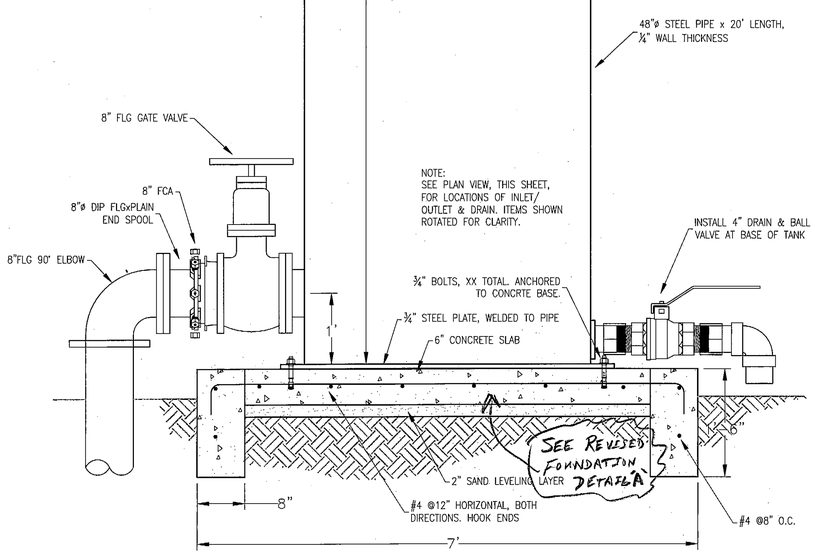

1 D2 BREAK TANK DETAIL

Scale: 1 in = 1 ft 0 in

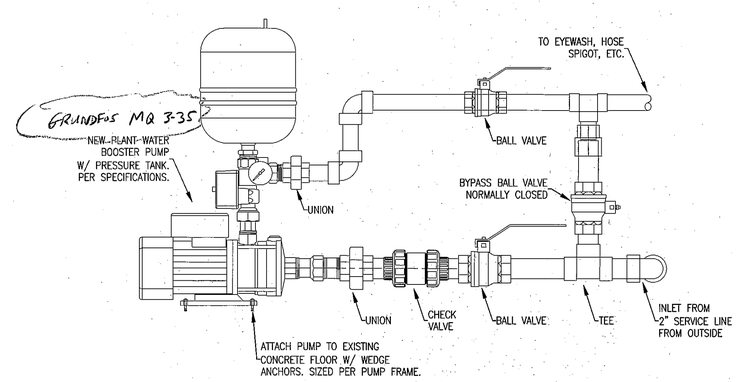

4 D2 PLANT WATER BOOSTER PUMP DETAILS

Scale: 2 in = 1 ft 0 in

REGISTERED PROFESSIONAL ENGINEER
KEITH SKWIRB
No. C 51290
Exp. 3-31-18
CIVIL
STATE OF CALIFORNIA

REV	DATE	REVISIONS	INITIAL
1	8/24/16	DED SEP	

WATER SYSTEM IMPROVEMENTS - 2015

DETAILS - 2

WASHINGTON COUNTY WATER DISTRICT

NEVADA COUNTY CALIFORNIA

Sauers Engineering, Inc.
Civil & Environmental Engineers
440A Lower Grass Valley Rd., Nevada City, CA 95959 (530) 265-9021

0 1
BAR IS ONE INCH ON ORIG. DRAWING
IF BAR DOES NOT MEASURE ONE INCH,
ADJUST SCALES ACCORDINGLY

PROJECT NUMBER:	14-001-02
DESIGN BY:	KSK
DRAFTING BY:	KEM
CHECKED BY:	DDM

FILE PATH: sei\washington\2015wtp&tank

DATE: JUNE 2016

SCALES:

HORIZONTAL

VERTICAL

D2

SHEET: 6 of 18

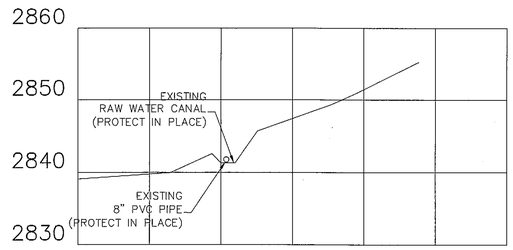

SECTION 'A–A'

SCALE
HORIZONTAL 1"=10'
VERTICAL 1"=10'

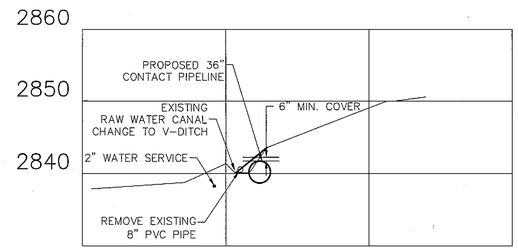

SECTION 'B–B'

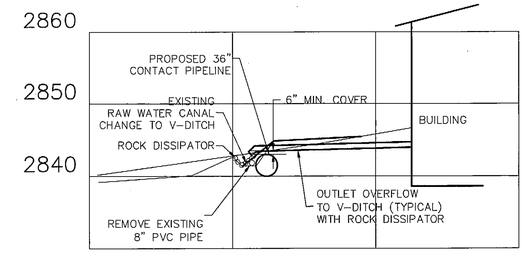

SECTION 'C–C'

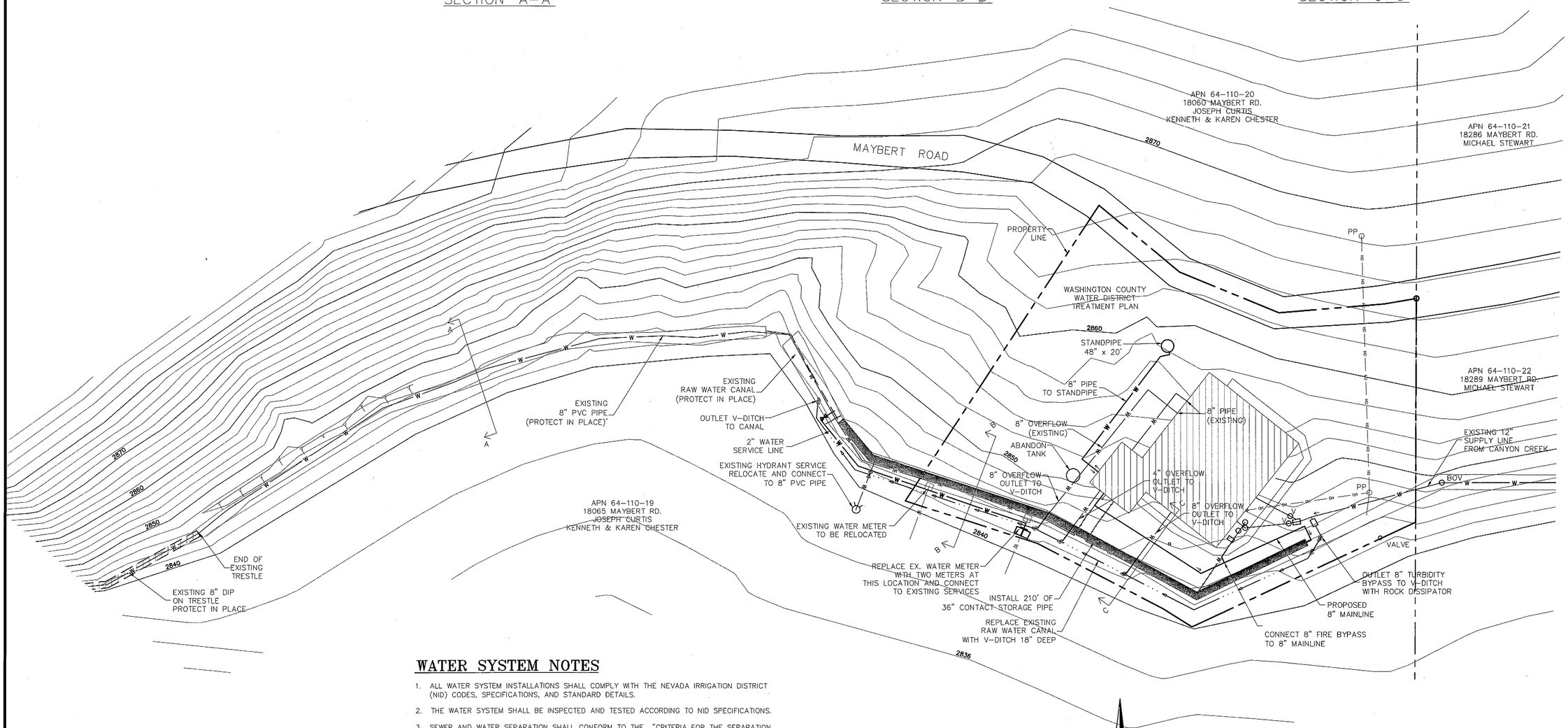

WATER SYSTEM NOTES

1. ALL WATER SYSTEM INSTALLATIONS SHALL COMPLY WITH THE NEVADA IRRIGATION DISTRICT (NID) CODES, SPECIFICATIONS, AND STANDARD DETAILS.
2. THE WATER SYSTEM SHALL BE INSPECTED AND TESTED ACCORDING TO NID SPECIFICATIONS.
3. SEWER AND WATER SEPARATION SHALL CONFORM TO THE "CRITERIA FOR THE SEPARATION WATER OF WATER MAINS AND SANITARY SEWERS" OF THE STATE OF CALIFORNIA DEPARTMENT OF HEALTH SERVICES.
4. BACKFILL AND PIPE BEDDING SHALL COMPLY WITH NID SPECIFICATIONS.
5. 36 INCH CONTACT PIPELINE SHALL BE C905 DR51 CL80 PVC GJ OR APPROVED EQUIVALENT.
6. ALL 8 INCH PIPE SHALL SDR51 80# PVC GJ, UNLESS OTHERWISE SHOWN.
7. ALL 1"–2" WATER SERVICE PIPE SHALL BE PE POLYETHYLENE PIPE.
8. ALL PIPE JOINTS SHALL BE RESTAINED WITH MECHANICAL JOINT RESTRAINTS.

SCALE
20 0 10 20 40
(IN FEET)
1 inch = 20 feet

REGISTERED PROFESSIONAL ENGINEER
BRYAN K. McALISTER
C 058570
December 31, 2016
CIVIL
STATE OF CALIFORNIA

DATE SIGNED:_____

PREPARED BY:
CITY OF NEVADA CITY
317 BROAD STREET
NEVADA CITY, CALIFORNIA 95959
(530) 265-2496

REV	DATE	REVISIONS	INITIAL

WATER SYSTEM IMPROVEMENTS - 2015

CONTACT PIPELINE

WASHINGTON COUNTY WATER DISTRICT

NEVADA COUNTY CALIFORNIA

Sauers Engineering, Inc.
Civil & Environmental Engineers
440A Lower Grass Valley Rd., Nevada City, CA 95959
(530) 265-8021

0 1
BAR IS ONE INCH ON ORIG. DRAWING
IF BAR DOES NOT MEASURE ONE INCH,
ADJUST SCALES ACCORDINGLY

PROJECT NUMBER:	14-001-02
DESIGN BY:	KSK
DRAFTING BY:	KEM
CHECKED BY:	DDM

FILE PATH: sei\washington\2015wtp&tank

DATE: MARCH 2016

SCALES:
1" = 20'
HORIZONTAL
VERTICAL

P1

SHEET: 7 of 18

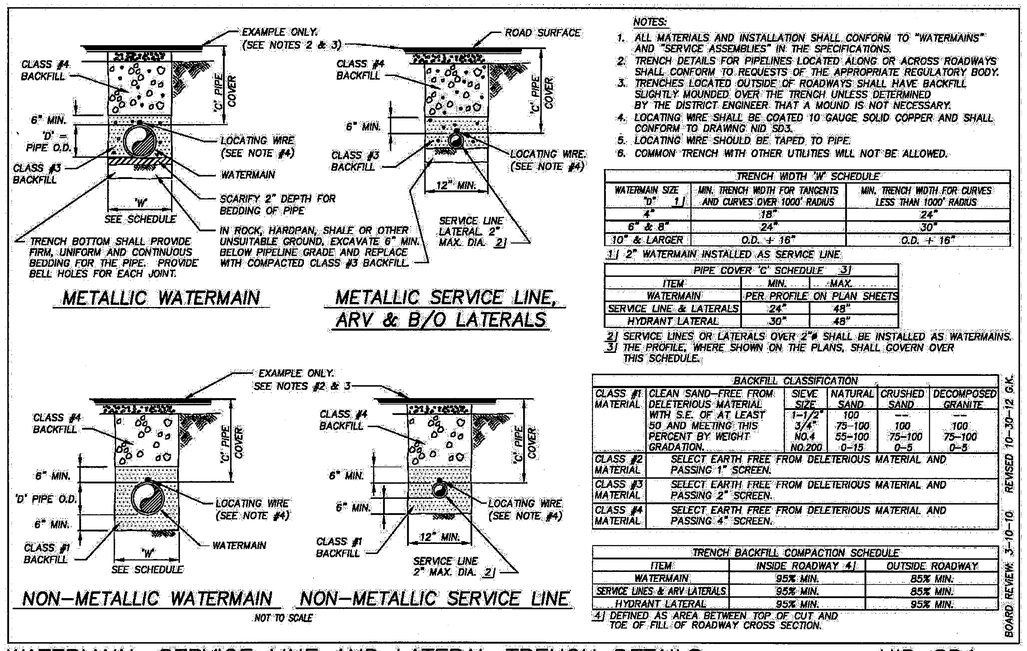

NOTES:

1. ALL MATERIALS AND INSTALLATION SHALL CONFORM TO "WATERMAINS" AND "SERVICE ASSEMBLIES" IN THE SPECIFICATIONS.
2. TRENCH DETAILS FOR PIPELINES LOCATED ALONG OR ACROSS ROADWAYS SHALL CONFORM TO REQUESTS OF THE APPROPRIATE REGULATORY BODY.
3. TRENCHES LOCATED OUTSIDE OF ROADWAYS SHALL HAVE BACKFILL SLIGHTLY MOUNDED OVER THE TRENCH UNLESS DETERMINED BY THE DISTRICT ENGINEER THAT A MOUND IS NOT NECESSARY.
4. LOCATING WIRE SHALL BE COATED 10 GAUGE SOLID COPPER AND SHALL CONFORM TO DRAWING NID SD3.
5. LOCATING WIRE SHOULD BE TAPED TO PIPE.
6. COMMON TRENCH WITH OTHER UTILITIES WILL NOT BE ALLOWED.

TRENCH WIDTH 'W' SCHEDULE		
WATERMAIN SIZE 'D' 1	MIN. TRENCH WIDTH FOR TANGENTS AND CURVES OVER 1000' RADIUS	MIN. TRENCH WIDTH FOR CURVES LESS THAN 1000' RADIUS
4"	18"	24"
6" & 8"	24"	30"
10" & LARGER	O.D. + 16"	O.D. + 16"

1 2" WATERMAIN INSTALLED AS SERVICE LINE.

PIPE COVER 'C' SCHEDULE 3		
ITEM	MIN.	MAX.
WATERMAIN	PER PROFILE ON PLAN SHEETS	
SERVICE LINE & LATERALS	24"	48"
HYDRANT LATERAL	30"	48"

2 SERVICE LINES OR LATERALS OVER 2"ø SHALL BE INSTALLED AS WATERMAINS.
3 THE PROFILE, WHERE SHOWN ON THE PLANS, SHALL GOVERN OVER THIS SCHEDULE.

BACKFILL CLASSIFICATION					
CLASS #1 MATERIAL	CLEAN SAND-FREE FROM DELETERIOUS MATERIAL WITH S.E. OF AT LEAST 50 AND MEETING THIS PERCENT BY WEIGHT GRADATION.	SIEVE SIZE	NATURAL SAND	CRUSHED SAND	DECOMPOSED GRANITE
		1-1/2"	100	---	---
		3/4"	75-100	100	100
		NO.4	55-100	75-100	75-100
		NO.200	0-15	0-5	0-5
CLASS #2 MATERIAL	SELECT EARTH FREE FROM DELETERIOUS MATERIAL AND PASSING 1" SCREEN.				
CLASS #3 MATERIAL	SELECT EARTH FREE FROM DELETERIOUS MATERIAL AND PASSING 2" SCREEN.				
CLASS #4 MATERIAL	SELECT EARTH FREE FROM DELETERIOUS MATERIAL AND PASSING 4" SCREEN.				

TRENCH BACKFILL COMPACTION SCHEDULE		
ITEM	INSIDE ROADWAY 4	OUTSIDE ROADWAY
WATERMAIN	95% MIN.	85% MIN.
SERVICE LINES & ARV LATERALS	95% MIN.	85% MIN.
HYDRANT LATERAL	95% MIN.	95% MIN.

4 DEFINED AS AREA BETWEEN TOP OF CUT AND TOE OF FILL OF ROADWAY CROSS SECTION.

BOARD REVIEW: 3-10-10 REVISED 10-30-12 G.K.

WATERMAIN, SERVICE LINE AND LATERAL TRENCH DETAILS NOT TO SCALE NID SD1

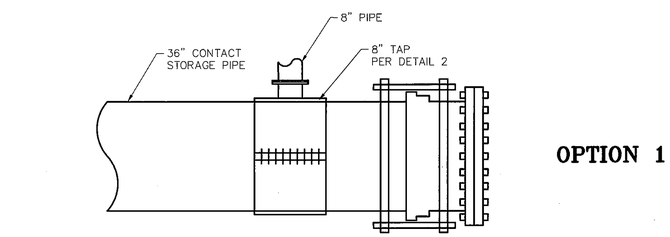

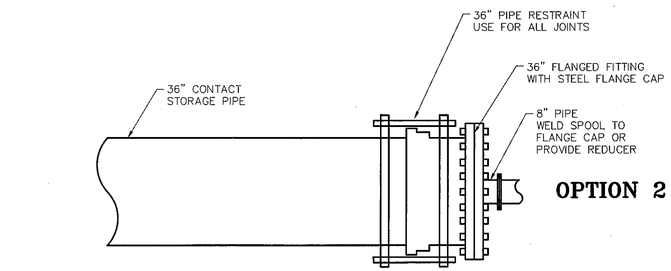

1 **36" PIPELINE CAP DETAIL**
NTS

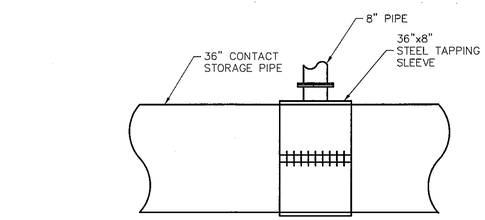

2 **36" PIPELINE / 8" CONNECTION DETAIL**
NTS

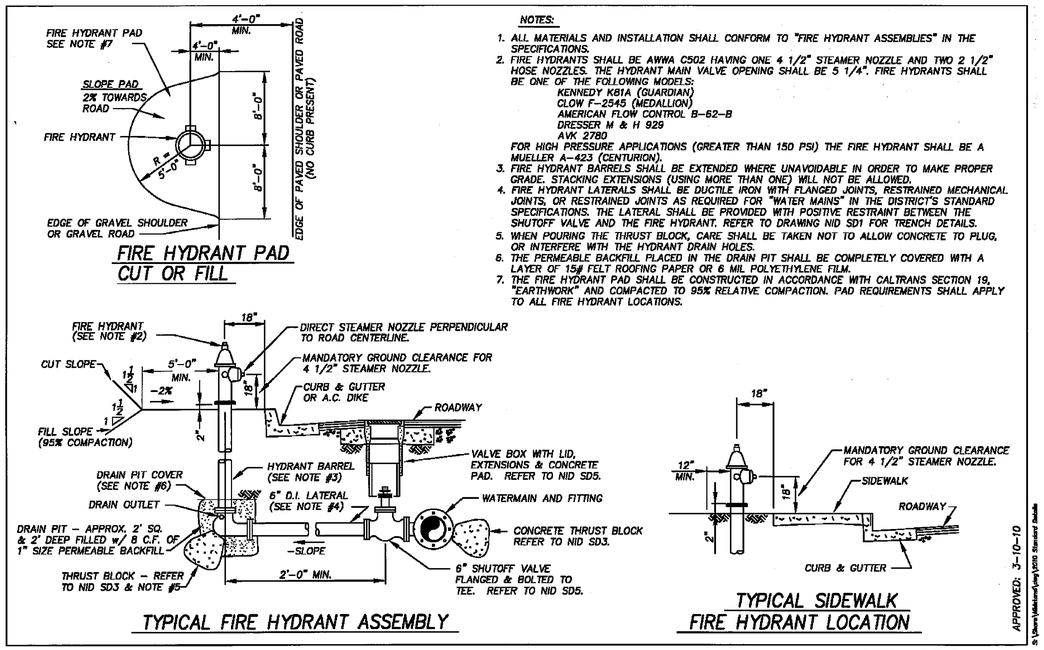

NOTES:

1. ALL MATERIALS AND INSTALLATION SHALL CONFORM TO "FIRE HYDRANT ASSEMBLIES" IN THE SPECIFICATIONS.
2. FIRE HYDRANTS SHALL BE AWWA C502 HAVING ONE 4 1/2" STEAMER NOZZLE AND TWO 2 1/2" HOSE NOZZLES. THE HYDRANT MAIN VALVE OPENING SHALL BE 5 1/4". FIRE HYDRANTS SHALL BE ONE OF THE FOLLOWING MODELS:
   KENNEDY K81A (GUARDIAN)
   CLOW F-2545 (MEDALLION)
   AMERICAN FLOW CONTROL B-62-B
   DRESSER M & H 929
   AVK 2780
   FOR HIGH PRESSURE APPLICATIONS (GREATER THAN 150 PSI) THE FIRE HYDRANT SHALL BE A MUELLER A-423 (CENTURION).
3. FIRE HYDRANT BARRELS SHALL BE EXTENDED WHERE UNAVOIDABLE IN ORDER TO MAKE PROPER GRADE. STACKING EXTENSIONS (USING MORE THAN ONE) WILL NOT BE ALLOWED.
4. FIRE HYDRANT LATERALS SHALL BE DUCTILE IRON WITH FLANGED JOINTS, RESTRAINED MECHANICAL JOINTS, OR RESTRAINED JOINTS AS REQUIRED FOR "WATER MAINS" IN THE DISTRICT'S STANDARD SPECIFICATIONS. THE LATERAL SHALL BE PROVIDED WITH POSITIVE RESTRAINT BETWEEN THE SHUTOFF VALVE AND THE FIRE HYDRANT. REFER TO DRAWING NID SD1 FOR TRENCH DETAILS.
5. WHEN POURING THE THRUST BLOCK, CARE SHALL BE TAKEN NOT TO ALLOW CONCRETE TO PLUG, OR INTERFERE WITH THE HYDRANT DRAIN HOLES.
6. THE PERMEABLE BACKFILL PLACED IN THE DRAIN PIT SHALL BE COMPLETELY COVERED WITH A LAYER OF 15# FELT ROOFING PAPER OR 6 MIL POLYETHYLENE FILM.
7. THE FIRE HYDRANT PAD SHALL BE CONSTRUCTED IN ACCORDANCE WITH CALTRANS SECTION 19, "EARTHWORK" AND COMPACTED TO 95% RELATIVE COMPACTION. PAD REQUIREMENTS SHALL APPLY TO ALL FIRE HYDRANT LOCATIONS.

APPROVED: 3-10-10 S:\Users\Mckinnon\Long\SD200 Standard Details

FIRE HYDRANT ASSEMBLY NOT TO SCALE NID SD8

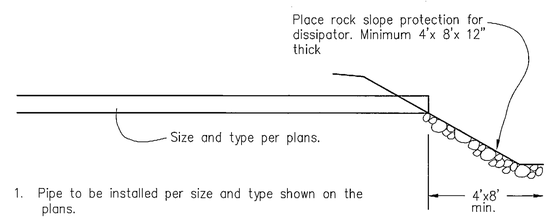

1. Pipe to be installed per size and type shown on the plans.
2. Rock slope protection to be No.1 backing placed a minimum of 12" thickness, method "B" placement.

3 **ROCK DISSIPATOR DETAIL**
NTS

REGISTERED PROFESSIONAL ENGINEER BRYAN K. McALLISTER C 058570 December 31, 2016 CIVIL STATE OF CALIFORNIA

DATE SIGNED:_____

PREPARED BY:
CITY OF NEVADA CITY
317 BROAD STREET
NEVADA CITY, CALIFORNIA 95959
(530) 265-2496

REV	DATE	REVISIONS	INITIAL

WATER SYSTEM IMPROVEMENTS - 2015

CONTACT PIPELINE DETAILS

WASHINGTON COUNTY WATER DISTRICT

NEVADA COUNTY CALIFORNIA

Sauers Engineering, Inc.
Civil & Environmental Engineers
440A Lower Grass Valley Rd., Nevada City, CA 95959
(530) 265-8021

0 1
BAR IS ONE INCH ON ORIG. DRAWING IF BAR DOES NOT MEASURE ONE INCH, ADJUST SCALES ACCORDINGLY

PROJECT NUMBER:	14-001-02
DESIGN BY:	KSK
DRAFTING BY:	KEM
CHECKED BY:	DDM

FILE PATH: sei\washington\2015\wtp&tank

DATE: MARCH 2016

SCALES: 1" = 20' HORIZONTAL

VERTICAL

P2

SHEET: 8 of 18

1/T2 STORAGE TANK UTILITIES - SITE PLAN

Scale: 1 in = 5 ft 0 in

REV	DATE	REVISIONS	INITIAL

WATER SYSTEM IMPROVEMENTS - 2015

EXISTING STORAGE TANK ACCESS AND UTILITIES

WASHINGTON COUNTY WATER DISTRICT

NEVADA COUNTY CALIFORNIA

Sauers Engineering, Inc.
Civil & Environmental Engineers
440A Lower Grass Valley Rd., Nevada City, CA 95959 (530) 265-8021

0 1
BAR IS ONE INCH ON ORIG. DRAWING
IF BAR DOES NOT MEASURE ONE INCH, ADJUST SCALES ACCORDINGLY

PROJECT NUMBER:	14-001-02
DESIGN BY:	KSK
DRAFTING BY:	KEM
CHECKED BY:	DDM

FILE PATH: sei\washington\2015wtp&tank

DATE: JUNE 2016

SCALES:
HORIZONTAL
VERTICAL

T1

SHEET: 9 of 18

REGISTERED PROFESSIONAL ENGINEER
KEITH S. KNIEB
No. C 51290
Exp. 3-31-18
CIVIL
STATE OF CALIFORNIA

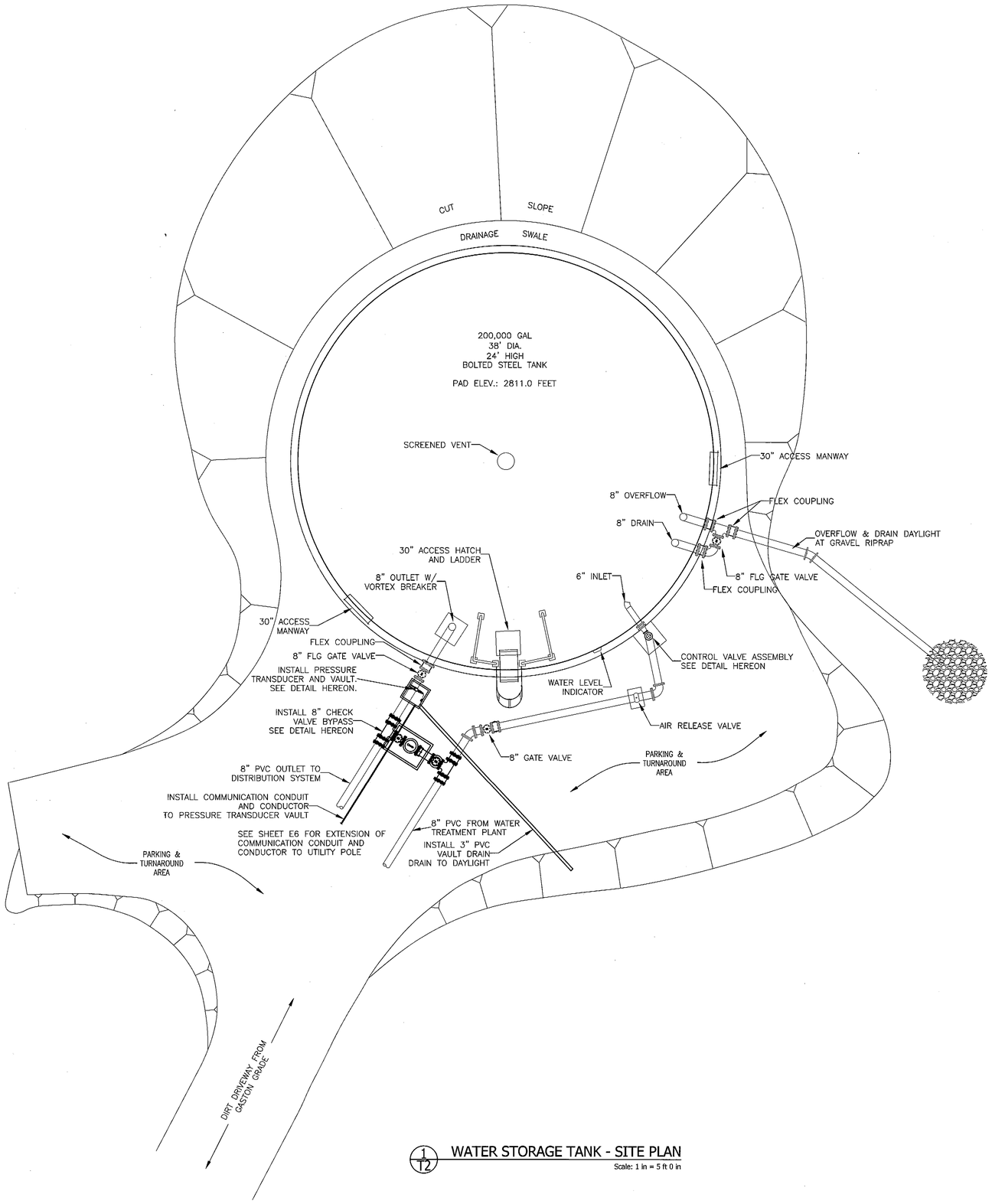

1/T2 WATER STORAGE TANK - SITE PLAN

Scale: 1 in = 5 ft 0 in

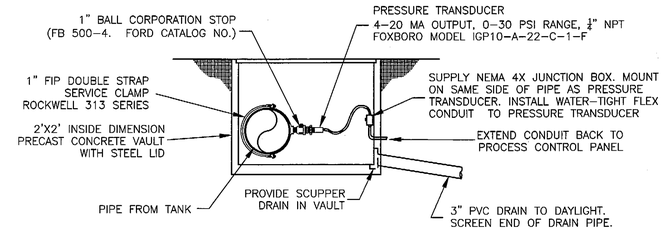

2/T2 PRESSURE TRANSDUCER DETAIL

Not to Scale

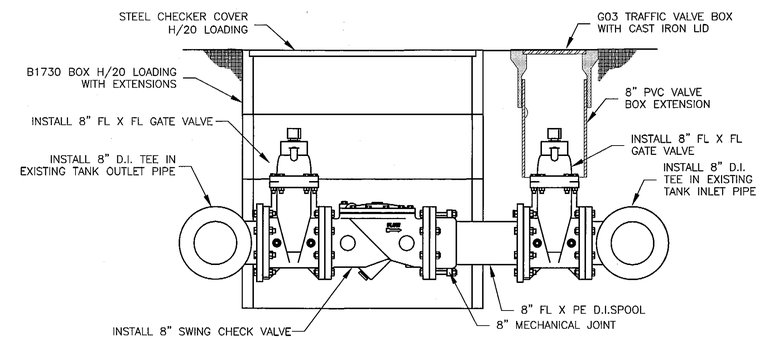

3/T2 CHECK VALVE BYPASS DETAIL

Not to Scale

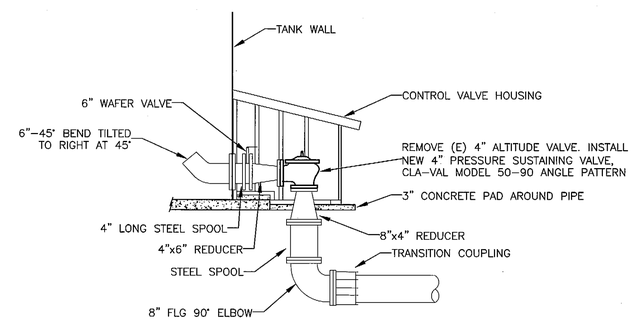

4/T2 CONTROL VALVE DETAIL

Scale: 1 in = 5 ft 0 in

REV	DATE	REVISIONS	INITIAL

WATER SYSTEM IMPROVEMENTS - 2015

STORAGE TANK DETAILS

WASHINGTON COUNTY WATER DISTRICT

NEVADA COUNTY CALIFORNIA

Sauers Engineering, Inc.
Civil & Environmental Engineers
440A Lower Grass Valley Rd., Nevada City, CA 95959 (530) 265-6021

0 1
BAR IS ONE INCH ON ORIG. DRAWING
IF BAR DOES NOT MEASURE ONE INCH, ADJUST SCALES ACCORDINGLY

PROJECT NUMBER:	14-001-02
DESIGN BY:	KSK
DRAFTING BY:	KEM
CHECKED BY:	DDM

FILE PATH: sei\washington\2015wtp&tank

DATE: JUNE 2016

SCALES:
HORIZONTAL
VERTICAL

T2

SHEET: 10 of 18

REGISTERED PROFESSIONAL ENGINEER JOHN S KNABB No. C 51290 Exp. 3-31-18 CIVIL STATE OF CALIFORNIA

SYMBOLS LIST

SYMBOL	DESCRIPTION
A	LIGHTING FIXTURE SYMBOL – TYPE & QUANTITY
	PANEL BOARD
	CONTROL PANEL
WHM	WATT HOUR METER AND SOCKET
	ELAPSED TIME METER
	TRANSFORMER
	CONTROL POWER TRANSFORMER
	CURRENT TRANSFORMER
M	METER & CURRENT TRANSFORMER
	BRACKET LIGHT FIXTURE
$o	SINGLE POLE TOGGLE SWITCH, SWITCHING FIXTURES DENOTED
$m	MOTOR SWITCH
	DEDICATED SPECIALTY OUTLET
T	THERMOSTAT
H	HEATER, ELECTRIC
5	MOTOR, HORSEPOWER SIZE NOTED
M	MOTOR STARTER CONTACTOR COIL
	DISCONNECT SWITCH
	DISCONNECT SWITCH WITH LOS & AUX CONTACT
	CONDUIT RUN UNDER FLOOR OR UNDERGROUND
G	GROUND BUS
N	NEUTRAL BUS
PB	PULL BOX
	WIRES CONNECTED
	WIRES NOT CONNECTED
	CONDUIT CROSSING NOT CONNECTED
SV	SOLENOID VALVE
LSL	LEVEL SENSOR LOW
ZS	INTRUSION SWITCH
FM	FLOW METER
LE	LEVEL ELEMENT
LIT	LEVEL INDICATOR XMTR
PIT	PRESSURE INDICATOR XMTR
H	FIRE ALARM HEAT DETECTOR
S	SMOKE DETECTOR

SYMBOL	DESCRIPTION
	GROUND
	CONDUIT & WIRE IDENTIFICATION TAG
15	TYPICAL MOTOR CONTROL CENTER IDENTIFICATION TAG
	TELEPHONE OUTLET, WALL
J	JUNCTION BOX
	RECEPTACLE
	RECEPTACLE ABOVE COUNTER
	FIELD CONNECTION TERMINAL BLOCK
	CONTACT NORMALLY OPEN
	CONTACT NORMALLY CLOSED
OL	OVERLOAD DEVICE CONTACT
	OVERLOAD DEVICE HEAT ELEMENT
	LIMIT SWITCH, NORMALLY CLOSED
	LIMIT SWITCH, NORMALLY OPEN
	LIMIT SWITCH, NEUTRAL POSITION
T.O.	TIME DELAY OPEN CONTACT, NORMALLY CLOSED TIME OPEN
T.C.	TIME DELAY CLOSE CONTACT, NORMALLY OPEN TIME CLOSE
	DISCONNECT SWITCH
	PUSH BUTTON, NORMALLY OPEN OR MOMENTARILY CLOSED
	PUSH BUTTON, NORMALLY CLOSED OR MOMENTARILY OPEN
	TEMP. SENSOR, NORMALLY CLOSED
PTT W	WHITE PILOT LIGHT, PUSH TO TEST
PTT G	GREEN PILOT LIGHT, PUSH TO TEST
PTT R	RED PILOT LIGHT, PUSH TO TEST
5	INDICATION FUSE HOLDER AMPERE SIZE SHOWN
	ANTENNA MAST
J	LIGHT FIXTURE
J	LIGHT FIXTURE NL WITH BATTERY BACK-UP NEC
CP	HOMERUN WITH 3#12 U.O.N.
	EMERGENCY LIGHT FIXTURE
	LIGHT FIXTURE (MOUNTED ON POLE)
$	SWITCH
	FAN

ABBREVIATIONS

ABBREVIATION	DESCRIPTION
A	AMPERES
AC	ALTERNATING CURRENT
AI	PLC ANALOG INPUT
AO	PLC ANALOG OUTPUT
AFF	ABOVE FINISHED FLOOR
BAT	BATTERY
BC	BARE COPPER
BW	BACKWASH
CHRG	CHARGER
C	CLOSE OR CONDUIT
CB	CIRCUIT BREAKER
COMP	COMPRESSOR
CPT	CONTROL POWER TRANSFORMER
CP	CONTROL PANEL
CR	CONTROL RELAY
CS	CONTROL STATION
CT	CURRENT TRANSFORMER
DEMO'D	DEMOLISHED
DC	DIRECT CURRENT
DI	PLC DIGITAL INPUT
DP	DISTRIBUTION PANEL
DO	PLC DIGITAL OUTPUT
(E)	EXISTING
EF	EXHAUST FAN
(F)	FUTURE
FC	FAIL CLOSED
FLP	FAIL LAST POSITION
FM	FLOW METER
FO	FAIL OPEN
FS	FLOAT SWITCH
FVNR	FULL VOLTAGE NON REVERSING
GFI	GROUND FAULT CIRCUIT INTERRUPTER
GEN	GENERATOR
G,	GROUND
GND	HIGH PRESSURE SODIUM
HPSI	INTERLOCK
I/I	CURRENT TO CURRENT DEVICE
I/E	CURRENT TO VOLTAGE DEVICE
IND	INDICATOR
I/O	INPUT/OUTPUT
I/P	CURRENT TO PRESSURE DEVICE
ISR	INTRINSICALLY SAFE RELAY
KVA	KILOVOLT AMPERES
LA	LIGHTNING ARRESTOR
LP	LIGHTING PANEL
LOS	LOCK OFF STOP PUSH BUTTON
LPU	LINE PROTECTION UNIT
LSL	LOW LEVEL SWITCH
mA	MILLIAMPERES
MCC	MOTOR CONTROL CENTER
MCP	MOTOR CIRCUIT PROTECTOR

ABBREVIATION	DESCRIPTION
MH	MANHOLE
MTS	MANUAL TRANSFER SWITCH
MOV	MOTOR OPERATED VALVE
MT	EMPTY CONDUIT WITH NYLON PULL CORD
N	NEUTRAL
NATS	NON-AUTOMATIC TRANSFER SWITCH
(N)	NEW
NP	NAMEPLATE
O	OPEN
OL	OVERLOAD DEVICE
PB	PULLBOX
PB1	PUSHBUTTON 1
PC	PROGRAMMABLE CONTROLLER
PFR	POWER FAILURE RELAY
P/I	PRESSURE TO CURRENT DEVICE
PLC	PROGRAMMABLE LOGIC CONTROLLER
PNL	PANEL
POC	POINT OF CONNECTION
PR	SHIELDED, PAIR CABLE
PRESS	PRESSURE
PS	PRESSURE SWITCH
PT	POTENTIAL TRANSFORMER
PTT	PUSH TO TEST
PV	PROCESS VARIABLE
RSC	RIGID STEEL CONDUIT
RTU	REMOTE TELEMETRY UNIT
RVSSS	REDUCED VOLTAGE SOLID STATE STARTER
SPD	SURGE PROTECTION DEVICE
SV	SOLENOID VALVE
SWBD	SWITCHBOARD
TDD,TDE	TIME DELAY RELAY
TELCO	TELEPHONE COMPANY
TM	THERMAL MAGNETIC CIRCUIT BREAKER
TVSS	TRANSIENT VOLTAGE SURGE SUPPRESSOR
TWP	TWISTED PAIR
TWSP	TWISTED SHIELDED PAIR
TYP	TYPICAL
UG	UNDERGROUND
UH	UNIT HEATER
U.O.N.	UNLESS OTHERWISE NOTED
V	VOLTS
VAR	VARIOUS
VFD	VARIABLE FREQUENCY DRIVE
VLV	VALVE
WP	WEATHERPROOF
XFMR	TRANSFORMER
XFTR	TRANSMITTER
ZS	LIMIT SWITCH (POSITION)

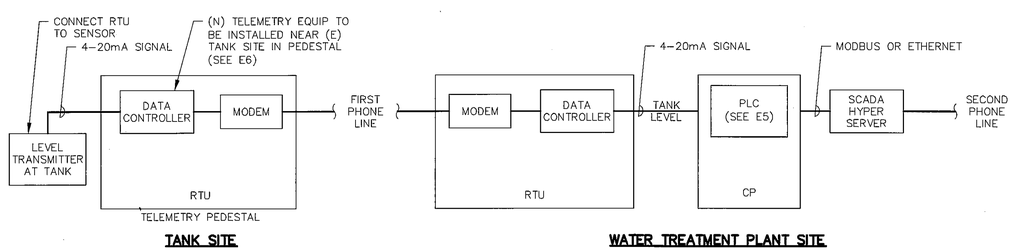

TANK SITE **WATER TREATMENT PLANT SITE**

TELEMETRY SCADA SYSTEM BLOCK DIAGRAM

NOTE:
THE PLANT SITE RTU AND PLC MAY BE COMBINED INTO A SINGLE COMPONENT

REV	DATE	REVISIONS	INITIAL

WATER SYSTEM IMPROVEMENTS - 2015

ELECTRICAL SYM, ABBREV. BLOCK DIAGRAM & NOTES

WASHINGTON COUNTY WATER DISTRICT

NEVADA COUNTY CALIFORNIA

Sauers Engineering, Inc.
Civil & Environmental Engineers
440A Lower Grass Valley Rd., Nevada City, CA 95959 (530) 265-8021

ECS
ECS Engineering, Inc.
Electrical & Control Systems Engineering
916-718-3686
samterry@earthlink.net

REGISTERED PROFESSIONAL ENGINEER No.14838 Exp. 12-31-15 ELECTRICAL STATE OF CALIFORNIA

0 1
BAR IS ONE INCH ON ORIG. DRAWING
IF BAR DOES NOT MEASURE ONE INCH, ADJUST SCALES ACCORDINGLY

PROJECT NUMBER:	14-001-02
DESIGN BY:	KSK
DRAFTING BY:	KEM
CHECKED BY:	DDM
FILE PATH:	sei\washington\2015wtp&tank
DATE:	SEPTEMBER 2015
SCALES: HORIZONTAL	E1
VERTICAL	SHEET: 11 of 18

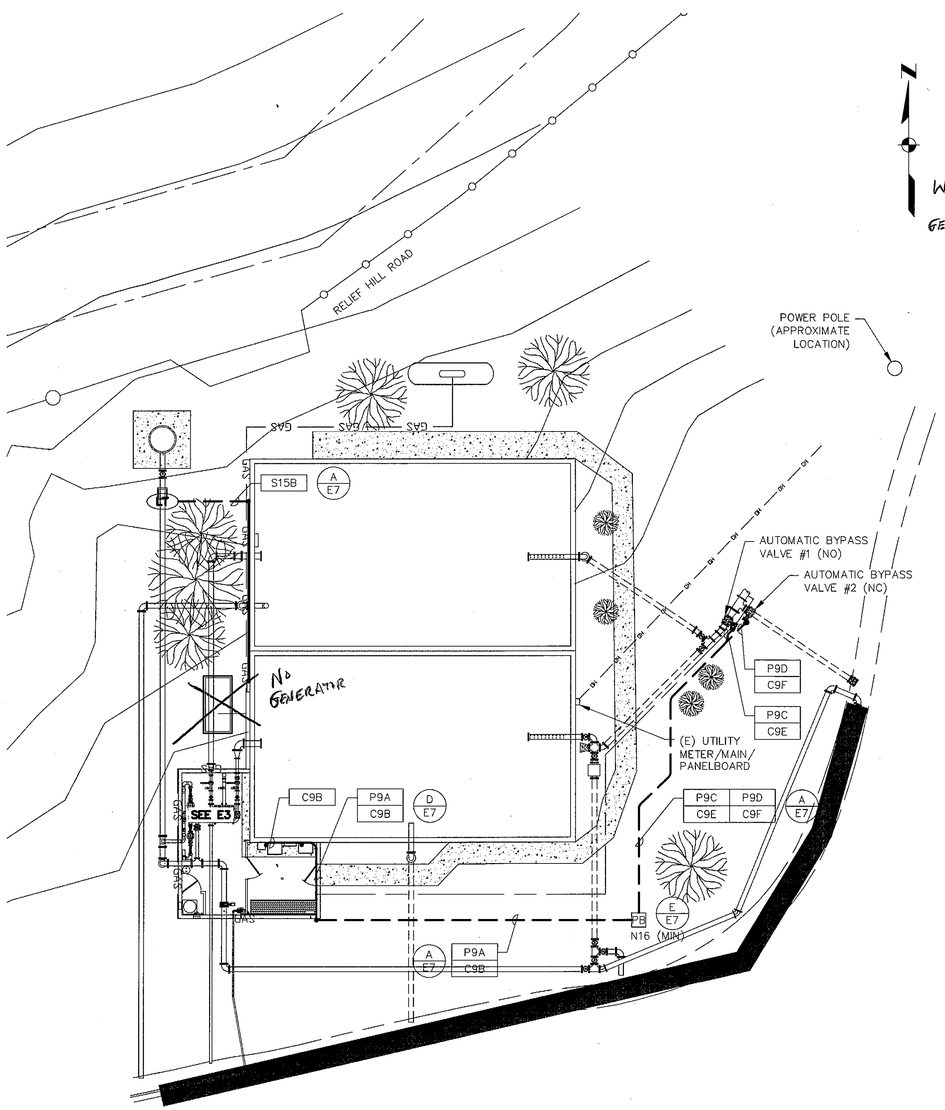

ELECTRICAL SITE PLAN
SCALE: 1" = 10'

WIRING FOR GENERATOR NIC

CONDUIT SCHEDULE

CONDUIT NUMBER	SIZE (INCH)	CONDUIT RUN FROM	CONDUIT RUN TO	EQUIP SERVED	CKT TYPE	CKT VOLTS	QUAN. CKT WIRES	CKT TYPE WIRE	CKT WIRE SIZE	N WIRE SIZE	GND TYPE WIRE	GND WIRE SIZE	NOTES
P2A	2	(E) PANELBOARD	(N) TRANSFER SWITCH	PLANT	P	240	2	XHHW	2	2	XHHW	6	TRANSFER SWITCH POWER
P2B	2	(N) PANELBOARD	(N) TRANSFER SWITCH	PLANT	P	240	2	XHHW	2	2	XHHW	6	PANELBOARD POWER
C2C	1	(N) CONTROL PANEL	(N) TRANSFER SWITCH	PLANT	C	120	6	XHHW	14		XHHW	14	TRANSFER SWITCH STATUS
P3A	2	(N) GENERATOR	(N) TRANSFER SWITCH	PLANT	P	240	2	XHHW	2	2	XHHW	6	GENERATOR POWER
P3B	1	(N) GENERATOR	(N) PANELBOARD	PLANT	P	240	3	XHHW	12	12	XHHW	2X12	GENERATOR AUX LOAD POWER
C3C	1	(N) GENERATOR	(N) TRANSFER SWITCH	PLANT	C	120	2	XHHW	12	12	XHHW	12	GENERATOR CALL
C3D	1	(N) GENERATOR	(N) CONTROL PANEL	PLANT	C	120	6	XHHW	14		XHHW	14	GENERATOR STATUS
P4A	3/4	(N) PANELBOARD	(N) POWER FAILURE RELAY	PLANT	P	240	3	THWN	12	12	THWN	12	POWER FAILURE RELAY SOURCE
C4B	3/4	(N) CONTROL PANEL	(N) POWER FAILURE RELAY	PLANT	C	120	2	THWN	14		THWN	14	POWER FAILURE RELAY STATUS
P5A	3/4	(N) PANELBOARD	(N) SURGE PROTECTION	PLANT	P	240	3	THWN	12	12	THWN	12	SURGE PROTECTION DEVICE SOURCE
C5B	3/4	(N) CONTROL PANEL	(N) SURGE PROTECTION	PLANT	C	120	2	THWN	14		THWN	14	SURGE PROTECTION DEVICE STATUS
P5C	3/4	(N) PANELBOARD	(N) SCADA SERVER	PLANT	P	240	2	THWN	12		THWN	12	SERVER POWER FEEDER
D5D	1	(N) CONTROL PANEL	(N) SCADA SERVER	PLANT	D		1	PER MFG					NETWORK COMMUNICATIONS CABLE
P6A	1	(N) PANELBOARD	(N) PUMP/VFD NO. 1	PLANT	P	240	2	THWN	12		THWN	12	PUMP VFD POWER SOURCE
C6C	3/4	(N) CONTROL PANEL	(N) PUMP/VFD NO. 1	PLANT	C	120	2	THWN	14		THWN	14	VFD CONTROL AND STATUS
S6D	1	(N) CONTROL PANEL	(N) PUMP/VFD NO. 1	PLANT	S	24	2	TSP	18		THWN	14	VFD CONTROL AND STATUS
P7A	1	(N) PANELBOARD	(N) PUMP/VFD NO. 2	PLANT	P	240	2	THWN	12		THWN	12	PUMP VFD POWER SOURCE
C7B	3/4	(N) CONTROL PANEL	(N) PUMP/VFD NO. 2	PLANT	C	120	2	THWN	14		THWN	14	VFD CONTROL AND STATUS (MAY COMBINE W/ C8C)
S7D	1	(N) CONTROL PANEL	(N) PUMP/VFD NO. 2	PLANT	S	24	2	TSP	18		THWN	14	VFD CONTROL AND STATUS (MAY COMBINE W/ S6D)
P8A	3/4	(N) PANELBOARD	(N) EXHAUST FAN & LIGHT	PLANT	P	120	4	THWN	12	12	THWN	12	EXHAUST FAN & LIGHT POWER
P8B	3/4	(N) PANELBOARD	(N) & (E) BLDG LIGHTS	PLANT	P	120	4	THWN	12	12	THWN	12	POWER FOR LIGHTS
P8C	3/4	(N) PANELBOARD	(N) RECEPTACLES	PLANT	P	120	4	THWN	12	12	THWN	12	POWER FOR RECPT
P8D	3/4	(N) PANELBOARD	(N) CONTROL PANEL	PLANT	P	120	4	THWN	12	12	THWN	12	POWER FOR CONTROL PANEL
P8E	3/4	(N) PANELBOARD	(N) TELCO RECPT	PLANT	P	120	2	THWN	12	12	THWN	12	POWER FOR RECEPTACLE
P8G	3/4	(N) PANELBOARD	(N) SMOKE DETECTORS	FIRE ALARM	P	120	2/EA	THWN	12	12	THWN	12	TWO SMOKE DETECTORS POWER
C8G	3/4	(N) CONTROL PANEL	(N) SMOKE DETECTORS	FIRE ALARM	C	120	2/EA	THWN	14	14	THWN	14	TWO SMOKE DETECTORS STATUS
C8H	3/4	(N) CONTROL PANEL	(N) INTRUSION SYSTEM	SECURITY	C	120	4	THWN	14	14	THWN	14	INTRUSION STATUS
P9A	1	(N) PANELBOARD	(N) VALVE PULLBOX	PLANT	P	240	4	THWN	12	12	THWN	2X12	VALVE ACTUATORS POWER FEEDER
C9B	1	(N) CONTROL PANEL	(N) VALVE PULLBOX	PLANT	C	120	16	THWN	14		THWN	2X14	VALVE ACTUATORS CONTROL & STATUS
P9C	1	(N) BYPASS VALVE #1	(N) VALVE PULLBOX	PLANT	P	240	2	THWN	12	12	THWN	12	VALVE ACTUATOR POWER FEEDER
P9D	1	(N) BYPASS VALVE #2	(N) VALVE PULLBOX	PLANT	P	240	2	THWN	12	12	THWN	12	VALVE ACTUATOR POWER FEEDER
C9E	1	(N) BYPASS VALVE #1	(N) VALVE PULLBOX	PLANT	C	120	8	THWN	14		THWN	14	VALVE ACTUATOR CONTROL & STATUS
C9F	1	(N) BYPASS VALVE #2	(N) VALVE PULLBOX	PLANT	C	120	8	THWN	14		THWN	14	VALVE ACTUATOR CONTROL & STATUS
T9J	1	(N) CONTROL PANEL	TELCO BACKBOARD	PLANT	T	LV	2	CAT 3					SCADA AND TELEMETRY COMMUNICATIONS
P10A	3/4	(N) PANELBOARD	(N) METERING PUMP	CHEMICAL SYSTEM	P	120	2	THWN	12	12	THWN	12	METERING PUMP POWER (MAY COMBINE W/ P8A)
C10B	3/4	(N) CONTROL PANEL	(N) METERING PUMP	CHEMICAL SYSTEM	C	120	6	THWN	14	14	THWN	14	METERING PUMP STATUS AND CONTROL
S10C	1	(N) CONTROL PANEL	(N) METERING PUMP	CHEMICAL SYSTEM	S	24	1	TSP	18		THWN	14	METERING PUMP PACING SIGNAL
P11A	3/4	(N) PANELBOARD	(N) FOURPLEX RECEPTS	PLANT	P	120	2/EA	THWN	12	2X12	THWN	2X12	INSTRUMENT POWER
S11B	1-1/4	(N) CONTROL PANEL	(N) INSTR JUNCTION BOX	PLANT	S	24	5	TSP	18		THWN	14	CL RESD & TURBIDITY SIGNAL & SPARE
S11C	3/4	INSTRUMENTS	(N) INSTR JUNCTION BOX	PLANT	S	24	1/INSTR	TSP	18		THWN	14	INDIVIDUAL INSTRUMENT SIGNALS
P12A	3/4	(N) PANELBOARD	(N) FLOWMETER	PLANT	P	120	2	THWN	12	12	THWN	12	FLOWMETER POWER POWER
S12B	1	(N) CONTROL PANEL	(N) FLOWMETER	PLANT	S	24	1	TSP	18		THWN	14	COMBINED FLOW SIGNAL (MAY COMBINED W/ S13A)
S13A	1	(N) CONTROL PANEL	(N) PRESSURE TRANS	PLANT	S	24	1	TSP	18		THWN	14	SYSTEM PRESSURE SIGNAL
P14A	3/4	(N) PANELBOARD	(N) PLANT WATER SYS RECPT	PLANT	P	120	2	THWN	10	12	THWN	12	PLANT WATER SYSTEM (MAY COMBINE W/ P8A)
C15A	1	(N) CONTROL PANEL	(N) FILTER LEVEL SWITCHES	PLANT	C	120	4	THWN	14		THWN	14	LOW FILTER LEVEL STATUS
S15B	1	(N) CONTROL PANEL	(N) STAND PIPE LEVEL XMT	PLANT	S	24	1	TSP	18		THWN	14	STANDPIPE LEVEL
P16A	1	(N) PANELBOARD	(N) PLANT SHUTDOWN VALVE	PLANT	P	240	2	THWN	12	12	THWN	12	VALVE ACTUATOR POWER FEEDER
C16B	1	(N) CONTROL PANEL	(N) PLANT SHUTDOWN VALVE	PLANT	C	120	8	THWN	14		THWN	14	VALVE ACTUATOR CONTROL & STATUS

IDENTIFIES THE TYPE OF CIRCUIT BEING SERVICED			
X=	SPARE	L=	LIGHTING
C=	CONTROL	P=	POWER
D=	DATA	S=	SIGNAL

REV	DATE	REVISIONS	INITIAL
	8-24-16	BID SET	

WATER SYSTEM IMPROVEMENTS - 2015

ELECTRICAL SITE PLAN AND CONDUIT SCHEDULE

WASHINGTON COUNTY WATER DISTRICT

NEVADA COUNTY CALIFORNIA

Sauers Engineering, Inc.
Civil & Environmental Engineers
440A Lower Grass Valley Rd., Nevada City, CA 95959 (530) 265-6021

ECS
ECS Engineering, Inc.
Electrical & Control Systems Engineering
916-718-2686
samterry@earthlink.net

BAR IS ONE INCH ON ORIG. DRAWING
IF BAR DOES NOT MEASURE ONE INCH, ADJUST SCALES ACCORDINGLY

PROJECT NUMBER:	14-001-02
DESIGN BY:	KSK
DRAFTING BY:	KEM
CHECKED BY:	DDM

FILE PATH: sei\washington\2015wtp&tank

DATE: SEPTEMBER 2015

SCALES: HORIZONTAL / VERTICAL

E2

SHEET: 12 of 18

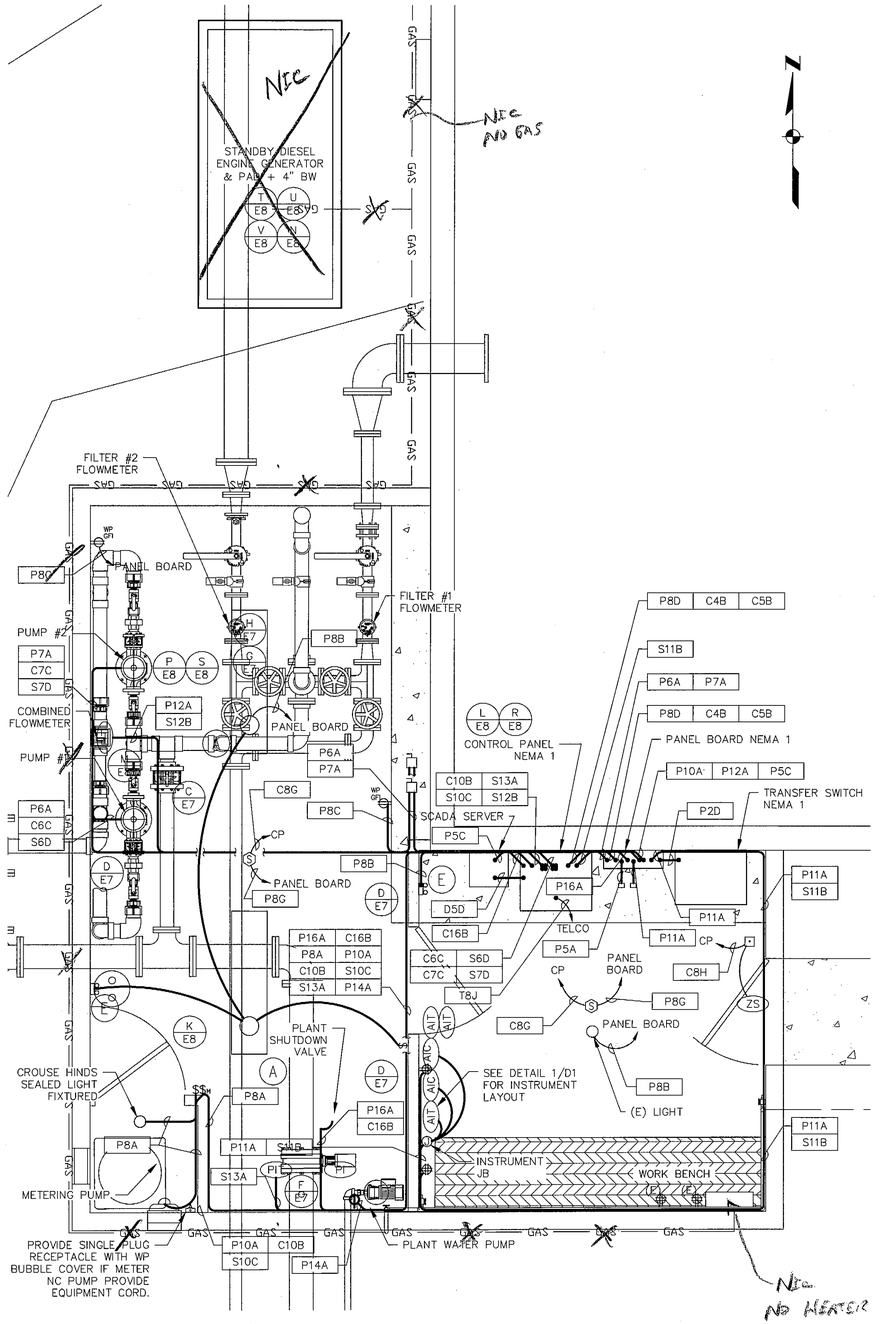

LAB AND PUMP ROOM PLAN – ELECTRICAL

Scale: 1"=2'

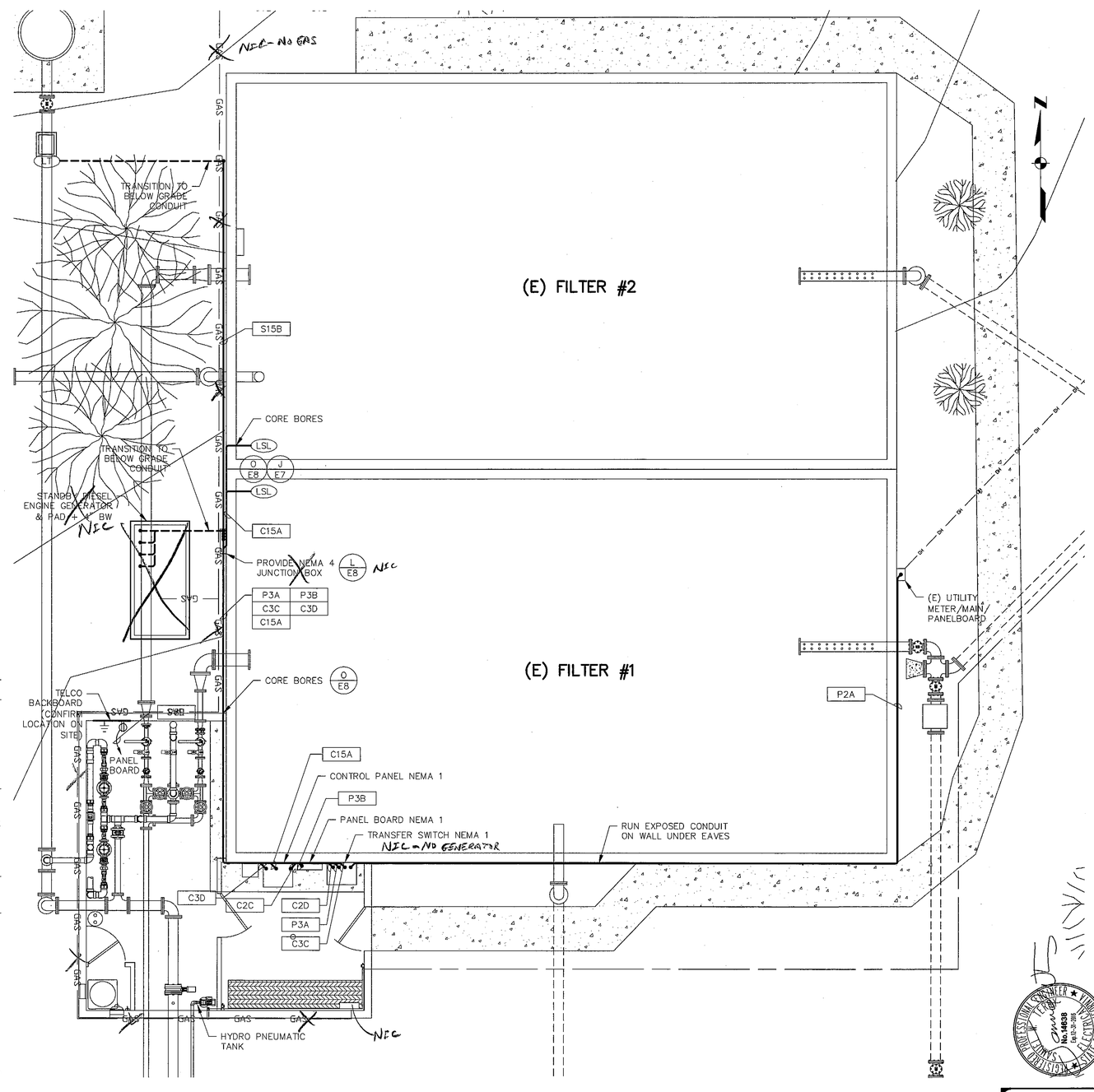

BUILDING PLAN – ELECTRICAL

Scale: 1"=4'

REV	DATE	REVISIONS	INITIAL
	8-25-16	BID SET	

WATER SYSTEM IMPROVEMENTS - 2015

ELECTRICAL BUILDING PLANS

WASHINGTON COUNTY WATER DISTRICT

NEVADA COUNTY CALIFORNIA

Sauers Engineering, Inc.
Civil & Environmental Engineers
440A Lower Grass Valley Rd., Nevada City, CA 95959 (530) 265-8021

ECS Engineering, Inc.
Electrical & Control Systems Engineering
916-718-3686
sauterry@earthlink.net

BAR IS ONE INCH ON ORIG. DRAWING IF BAR DOES NOT MEASURE ONE INCH, ADJUST SCALES ACCORDINGLY

PROJECT NUMBER:	14-001-02
DESIGN BY:	KSK
DRAFTING BY:	KEM
CHECKED BY:	DDM

FILE PATH: se\washington\2015wtp&tank

DATE: SEPTEMBER 2015

SCALES: HORIZONTAL / VERTICAL

E3

SHEET: 13 of 18

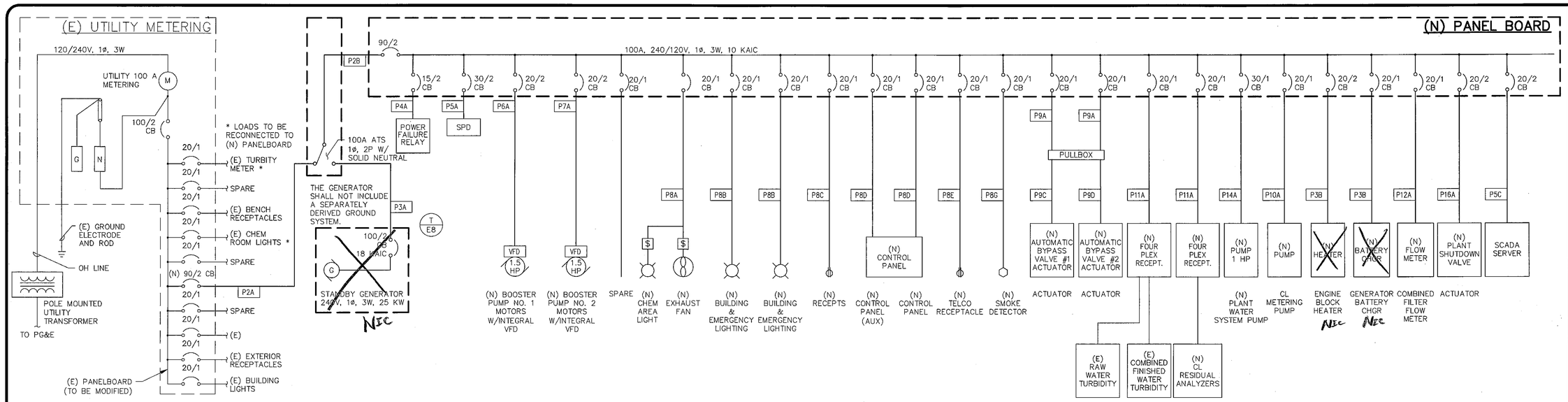

SINGLELINE DIAGRAM

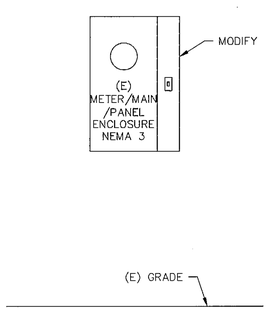

(E) OUTSIDE WALL ELEVATION

Scale: NOT TO SCALE

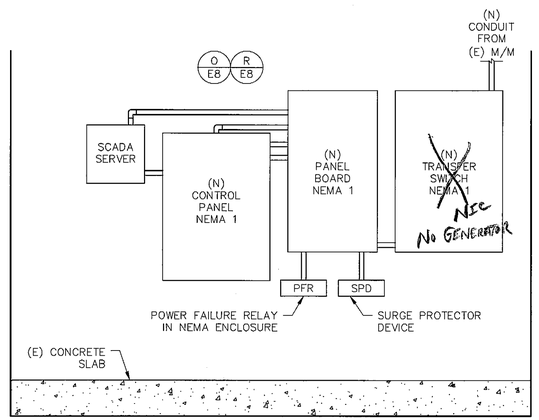

INSIDE WALL ELEVATION

Scale: NOT TO SCALE

! WARNING

ARC FLASH & SHOCK HAZARD

APPROPRIATE PPE AND TOOLS REQUIRED WHEN WORKING ON THIS EQUIPMENT

LOAD CALCULATION

WWD WTP SERVICE	STEP	GENERATOR	UTILITY
(N) BOOSTER PUMP No. 1 VFD	3	2.8 KVA	2.8 KVA
(N) BOOSTER PUMP No. 2 VFD	2	2.8 KVA	2.8 KVA
(N) CL METERING PUMP	1	0.7 KVA	0.7 KVA
(N) TURBIDITY METERS	1	0.2 KVA	0.2 KVA
(N) CL RESIDUAL ANALYZER	1	0.4 KVA	0.4 KVA
(N) PLANT WATER PUMP	1	2.2 KVA	2.2 KVA
(N) CONTROL PANEL	1	1.0 KVA	1.0 KVA
(N) VALVE ACTUATORS	4	1.0 KVA	1.0 KVA
(N) EXHAUST FAN	4	0.8 KVA	0.8 KVA
(N) LIGHTS & RECPTACLES	1	0.8 KVA	0.8 KVA
(N) GENERATOR BATTERY CHGR	5	0.3 KVA	0.3 KVA
(N) ENGINE BLOCK HEATER	5	1.2 KVA	1.2 KVA
(E) LIGHTS & RECPETACLES	.	.	1.0 KVA
		14.2 KVA	15.2 KVA
LARGEST MOTOR (MIN SERVICE 70/2)			+ 0.7 KVA
TOTAL		14.2 KVA (11 KW)	15.9 KVA (66 A)

ECS
ECS Engineering, Inc.
Electrical & Control System Engineering
916-718-3686
esmtorry@earthlink.net

REV	DATE	REVISIONS	INITIAL
	8-25-16		

WATER SYSTEM IMPROVEMENTS - 2015

SINGLELINE DIAGRAM, ELEVATION AND LOAD CALC

WASHINGTON COUNTY WATER DISTRICT

NEVADA COUNTY CALIFORNIA

Sauers Engineering, Inc.
Civil & Environmental Engineers
440A Lower Grass Valley Rd., Nevada City, CA 95959 (530) 265-6021

BAR IS ONE INCH ON ORIG. DRAWING IF BAR DOES NOT MEASURE ONE INCH, ADJUST SCALES ACCORDINGLY

PROJECT NUMBER:	14-001-02
DESIGN BY:	KSK
DRAFTING BY:	KEM
CHECKED BY:	DDM
FILE PATH:	sei\washington\2015wtp&tank
DATE:	SEPTEMBER 2015
SCALES: HORIZONTAL / VERTICAL	

E4

SHEET: 14 of 18

NOTE:
VFD'S ARE INTEGRAL TO MOTORS.

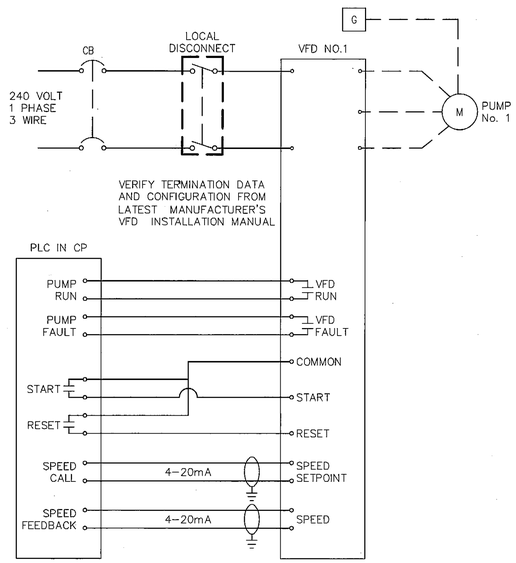

PUMP CONTROL WIRING DIAGRAM

(TYPICAL OF 2)

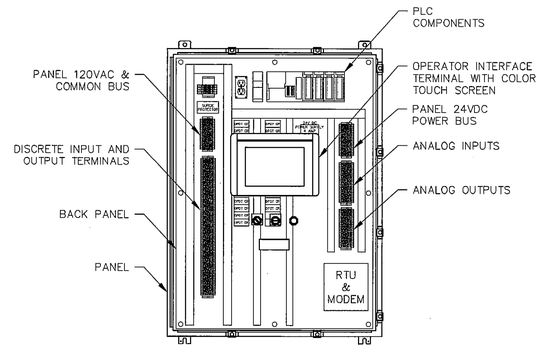

CONTROL PANEL DETAIL

Scale: NOT TO SCALE

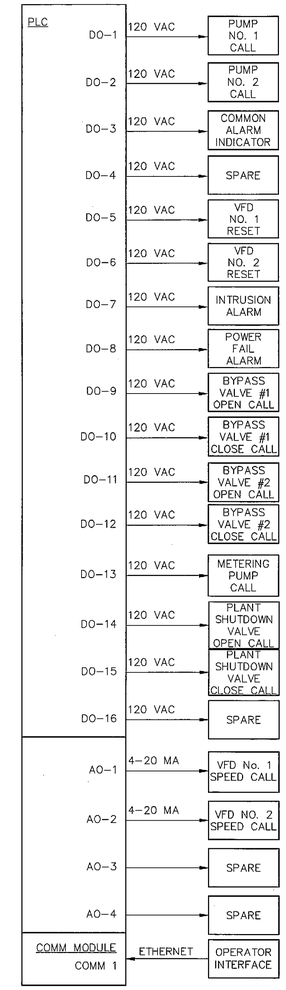

PLC I/O BLOCK DIAGRAM

Scale: NOT TO SCALE

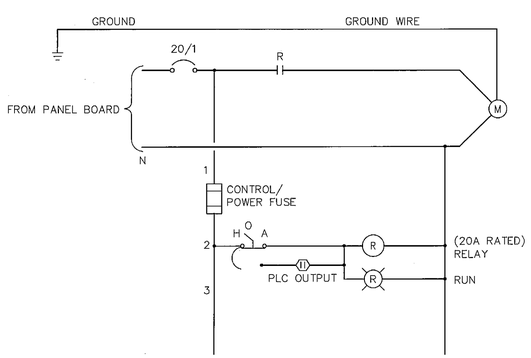

CHEMICAL METERING PUMP MOTOR STARTER DIAGRAM

Scale: NOT TO SCALE

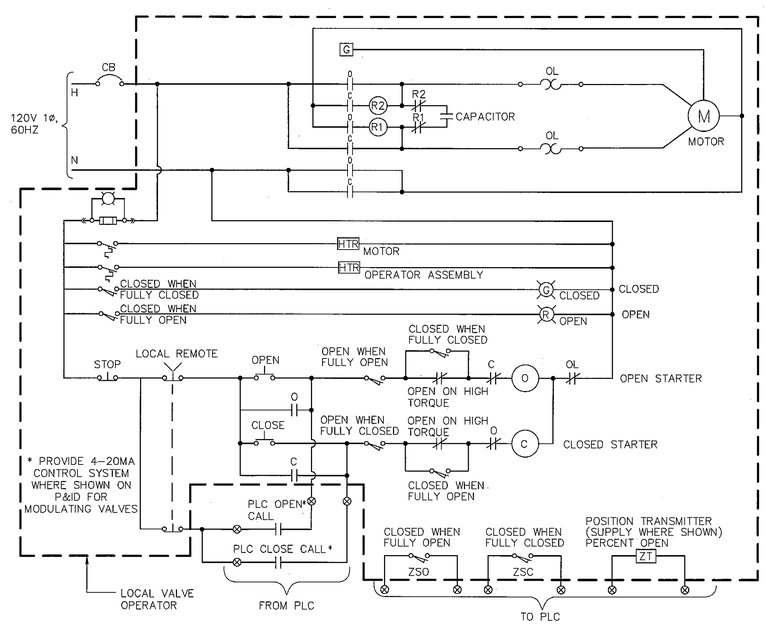

TYPICAL SINGLE VALVE CONTROL WIRING DIAGRAM

Scale: NOT TO SCALE

REV	DATE	REVISIONS	INITIAL

WATER SYSTEM IMPROVEMENTS - 2015

CONTROL WIRING AND BLOCK DIAGRAMS

WASHINGTON COUNTY WATER DISTRICT

NEVADA COUNTY CALIFORNIA

Sauers Engineering, Inc.
Civil & Environmental Engineers
440A Lower Grass Valley Rd., Nevada City, CA 95959 (530) 265-6021

ECS
ECS Engineering, Inc.
Electrical & Control Systems Engineering
916-718-3686
smterry@earthlink.net

0 1
BAR IS ONE INCH ON ORIG. DRAWING
IF BAR DOES NOT MEASURE ONE INCH, ADJUST SCALES ACCORDINGLY

PROJECT NUMBER:	14-001-02
DESIGN BY:	KSK
DRAFTING BY:	KEM
CHECKED BY:	DDM

FILE PATH: sei\washington\2015wtp&tank

DATE: SEPTEMBER 2015

SCALES:
HORIZONTAL
VERTICAL

E5

SHEET: 15 of 18

LOAD CALCULATION

PUMP STATION PEDESTAL

TELEMETRY PEDESTAL	1.0 KVA
SERVICE PEDESTAL LIGHT & RECEPT	0.4 KVA
TOTAL LOAD	1.4 KVA

NOTE:

AT THE CONTRACTORS OPTION EQUIPMENT IN THE TELEMETRY ENCLOSURE CAN BE MOVED TO THE METERING PEDESTAL.

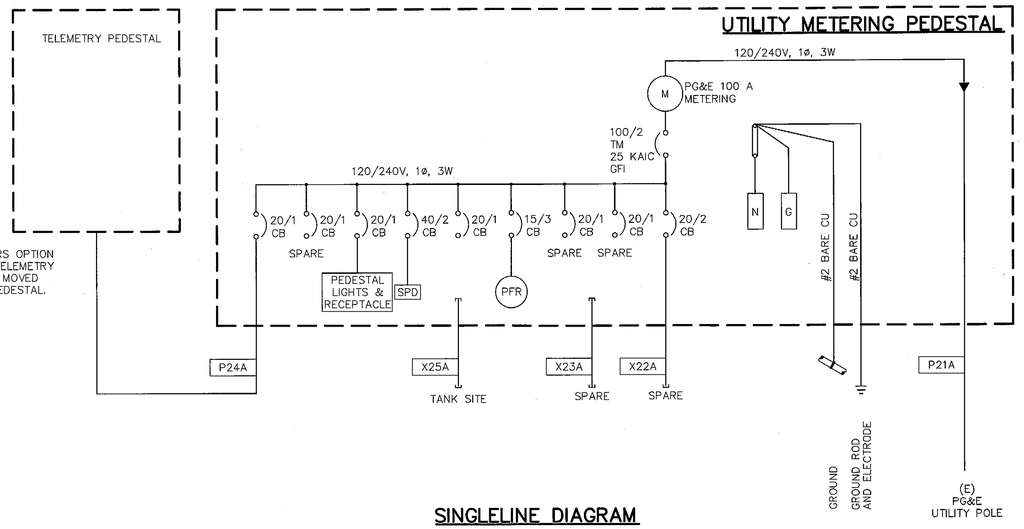

SINGLELINE DIAGRAM

CONDUIT SCHEDULE

CONDUIT NUMBER	SIZE (INCH)	CONDUIT RUN FROM	RUN TO	EQUIP SERVED	CKT TYPE	CKT VOLTS	QUAN. CKT WIRES	CKT TYPE WIRE	CKT WIRE SIZE	N WIRE SIZE	GND TYPE WIRE	GND WIRE SIZE	NOTES
P21A	4	METERING PEDESTAL	UTILITY POWER POLE	TANK SITE	P	240	1	PULLROPE					SECONDARY W/ RISER, PER PG&E STANDARDS
T21B	2	UTILITY TELCO POLE	UTILITY TELCO POLE	TANK SITE	T	LV	1	PULLROPE					TELCO CONDUIT PER TELCO STANDARDS
X22A	2	METERING PEDESTAL	STUB-OUT	FUTURE	X	120	1	PULLROPE					SPARE, CAP FOR FUTURE USE, MARK
X23A	1	METERING PEDESTAL	STUB-OUT	FUTURE	X	120	1	PULLROPE					SPARE, CAP FOR FUTURE USE, MARK
P24A	2	METERING PEDESTAL	TELEMETRY ENCLOSURE	TANK SITE	P	240	2	XHHW	10	10	XHHW	12	TELEMETRY PEDESTAL POWER FEEDER
X24B	1	METERING PEDESTAL	TELEMETRY ENCLOSURE	FUTURE	X	24	1	PULLROPE					CAP FOR FUTURE USE
X25A	2	METERING PEDESTAL	TANK SITE	FUTURE	P	240	1	PULLROPE	8	8	XHHW	10	CAP FOR FUTURE USE
S25B	1	LEVEL TRANSDUCER	TELEMETRY ENCLOSURE	TANK SITE	S	24	2	TSP	16		THWN	14	LEVEL SIGNAL

IDENTIFIES THE TYPE OF CIRCUIT BEING SERVICED			
X=	SPARE	L=	LIGHTING
C=	CONTROL	P=	POWER
D=	DATA	S=	SIGNAL

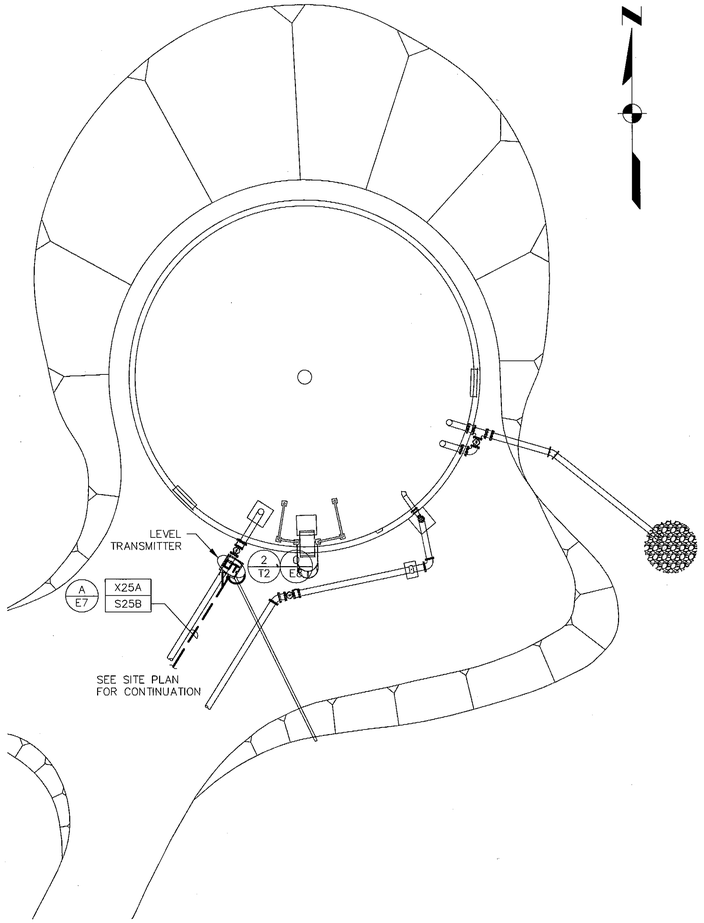

STORAGE TANK SITE PLAN – ELECTRICAL

Scale: 1"=8'

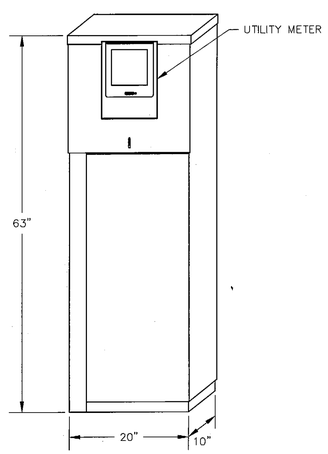

METERING PEDESTAL ELEVATION

Scale: NOT TO SCALE

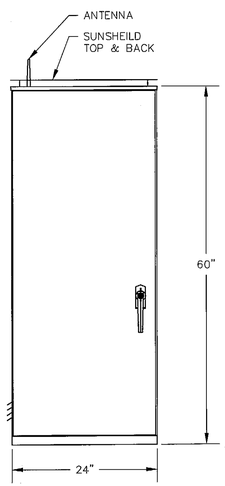

TELEMETRY ENCLOSURE ELEVATION

Scale: NOT TO SCALE

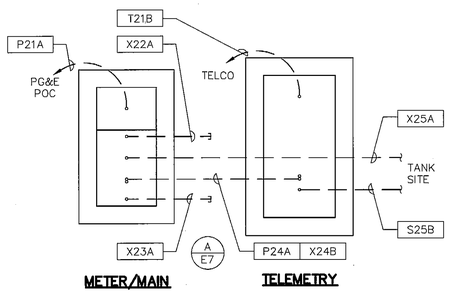

PEDESTAL SITE ELECTRICAL PLAN

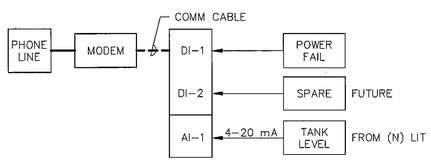

(E) TANK (N) TELEMETRY I/O DIAGRAM

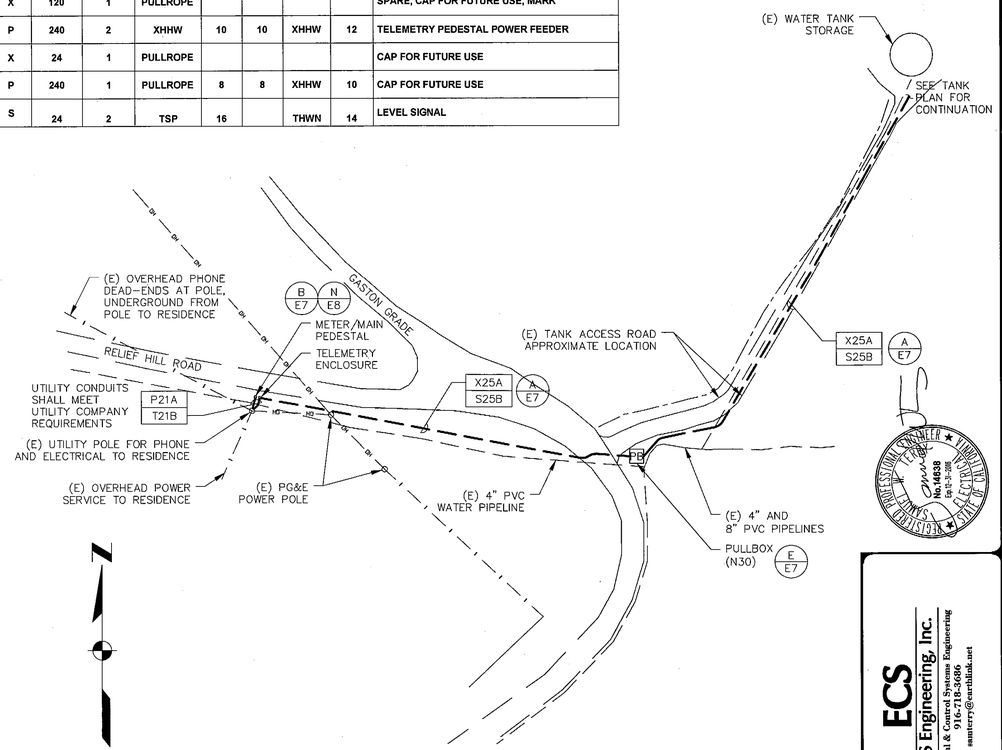

STORAGE TANK UTILITIES SITE PLAN – ELECTRICAL

Scale: 3/16"=1'-0"

REV	DATE	REVISIONS	INITIAL

WATER SYSTEM IMPROVEMENTS - 2015

STORAGE TANK PLANS ELECTRICAL, ELEVATIONS AND DIAGRAMS

WASHINGTON COUNTY WATER DISTRICT

NEVADA COUNTY CALIFORNIA

Sauers Engineering, Inc.
Civil & Environmental Engineers
440A Lower Grass Valley Rd., Nevada City, CA 95959 (530) 265-8021

ECS Engineering, Inc.
Electrical & Control Systems Engineering
916-718-3686
santerry@earthlink.net

0 1
BAR IS ONE INCH ON ORIG. DRAWING
IF BAR DOES NOT MEASURE ONE INCH, ADJUST SCALES ACCORDINGLY

PROJECT NUMBER:	14-001-02
DESIGN BY:	KSK
DRAFTING BY:	KEM
CHECKED BY:	DDM

FILE PATH: sei\washington\2015wtp&tank

DATE: SEPTEMBER 2015

SCALES: HORIZONTAL / VERTICAL

E6

SHEET: 16 of 18

NOTE:

TRENCHING LOCATED IN PAVED AREAS – ALL EARTHWORK AND REPAIR SHALL BE IN ACCORDANCE WITH AGENCY THAT HAS JURISDICTION.

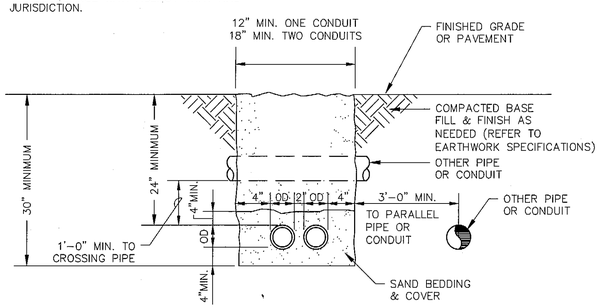

A/E7 TYPICAL TRENCH DETAIL

Scale: NOT TO SCALE

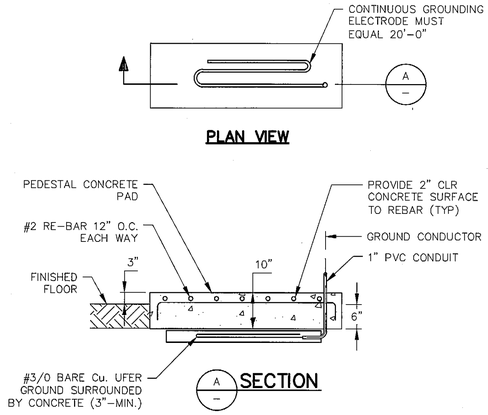

B/E7 PEDESTAL PAD DETAIL

Scale: NOT TO SCALE

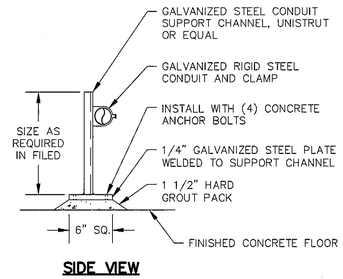

C/E7 FLOOR MOUNTED CONDUIT SUPPORT CHANNEL DETAIL

Scale: NOT TO SCALE

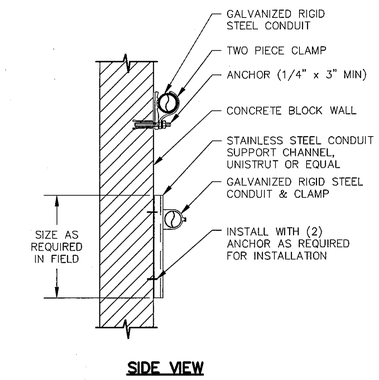

D/E7 WALL MOUNTED CONDUIT SUPPORT DETAILS

Scale: NOT TO SCALE

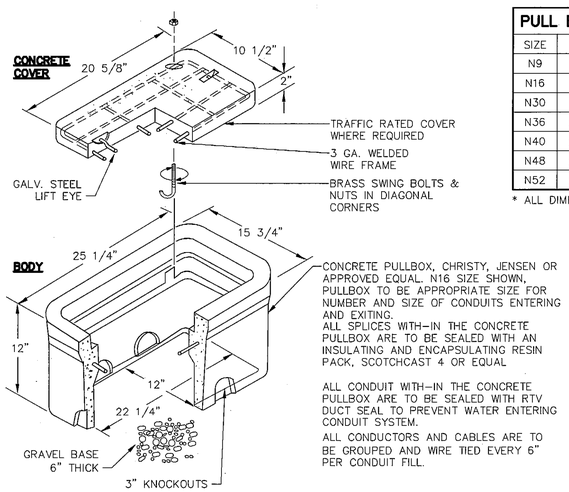

CONCRETE PULLBOX, CHRISTY, JENSEN OR APPROVED EQUAL. N16 SIZE SHOWN, PULLBOX TO BE APPROPRIATE SIZE FOR NUMBER AND SIZE OF CONDUITS ENTERING AND EXITING.
ALL SPLICES WITH-IN THE CONCRETE PULLBOX ARE TO BE SEALED WITH AN INSULATING AND ENCAPSULATING RESIN PACK, SCOTCHCAST 4 OR EQUAL

ALL CONDUIT WITH-IN THE CONCRETE PULLBOX ARE TO BE SEALED WITH RTV DUCT SEAL TO PREVENT WATER ENTERING CONDUIT SYSTEM.

ALL CONDUCTORS AND CABLES ARE TO BE GROUPED AND WIRE TIED EVERY 6" PER CONDUIT FILL.

E/E7 CONCRETE PULLBOX DETAIL

Scale: NOT TO SCALE

PULL BOX SCHEDULE			
SIZE	D*	H*	W*
N9	18"	10"	17"
N16	18"	12"	22"
N30	18"	13"	24"
N36	24"	17"	30"
N40	24"	24"	36"
N48	24"	30"	48"
N52	24"	30"	60"

* ALL DIMENSIONS ARE NOMINAL

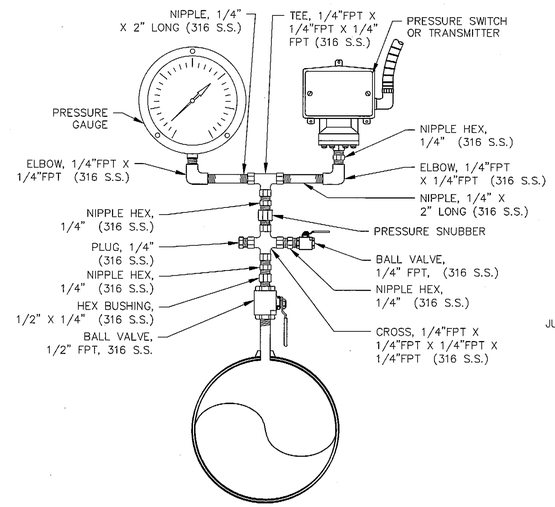

F/E7 PRESSURE SENOR DETAIL

Scale: NOT TO SCALE

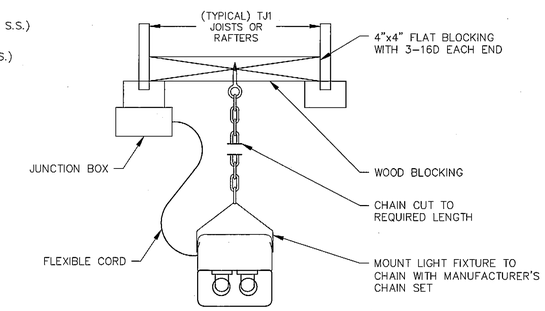

G/E7 CHAIN SUSPENDED MOUNTING DETAIL

Scale: NOT TO SCALE

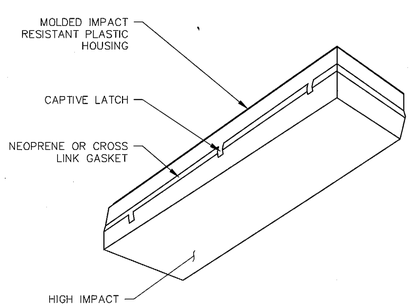

H/E7 FLUORESCENT FIXTURE DETAIL

Scale: NOT TO SCALE

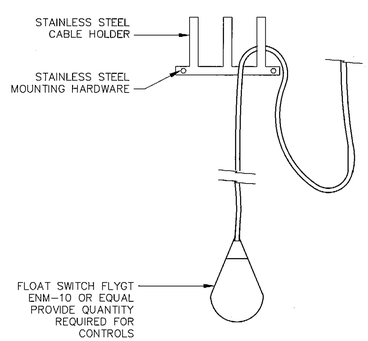

J/E7 FLOAT SWITCH MOUNTING DETAIL

Scale: NOT TO SCALE

REV	DATE	REVISIONS	INITIAL

WATER SYSTEM IMPROVEMENTS - 2015

ELECTRICAL DETAILS 1

WASHINGTON COUNTY WATER DISTRICT

NEVADA COUNTY CALIFORNIA

Sauers Engineering, Inc.
Civil & Environmental Engineers
440A Lower Grass Valley Rd., Nevada City, CA 95959 (530) 265-8021

ECS
ECS Engineering, Inc.
Electrical & Control Systems Engineering
(530) 274-8676
sunberry@earthlink.net

BAR IS ONE INCH ON ORIG. DRAWING
IF BAR DOES NOT MEASURE ONE INCH, ADJUST SCALES ACCORDINGLY

PROJECT NUMBER:	14-001-02
DESIGN BY:	KSK
DRAFTING BY:	KEM
CHECKED BY:	DDM

FILE PATH: sei\washington\2015wtp&tank

DATE: SEPTEMBER 2015

SCALES: HORIZONTAL / VERTICAL

E7

SHEET: 17 of 18

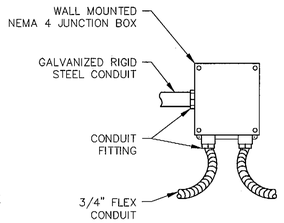

K E8 JUCTION BOX DETAIL
Scale: NOT TO SCALE

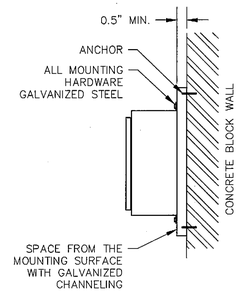

L E8 DEVICE/PANEL WALL SUPPORT DETAIL
Scale: NOT TO SCALE

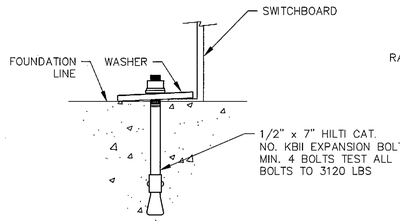

N E8 ANCHOR DETAIL
Scale: NOT TO SCALE

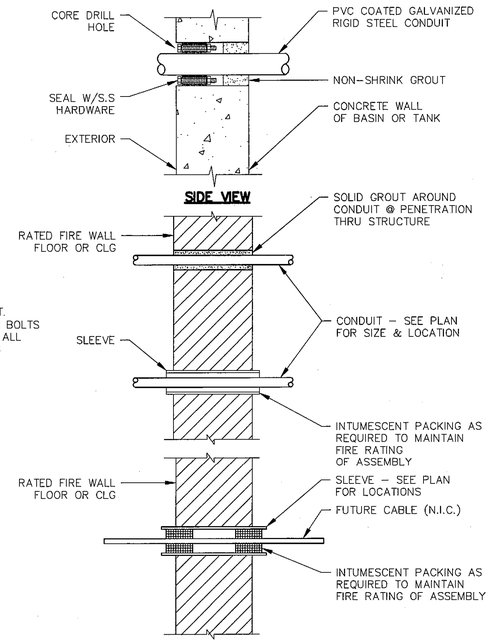

O E8 WALL PENETRATION DETAIL
Scale: NOT TO SCALE

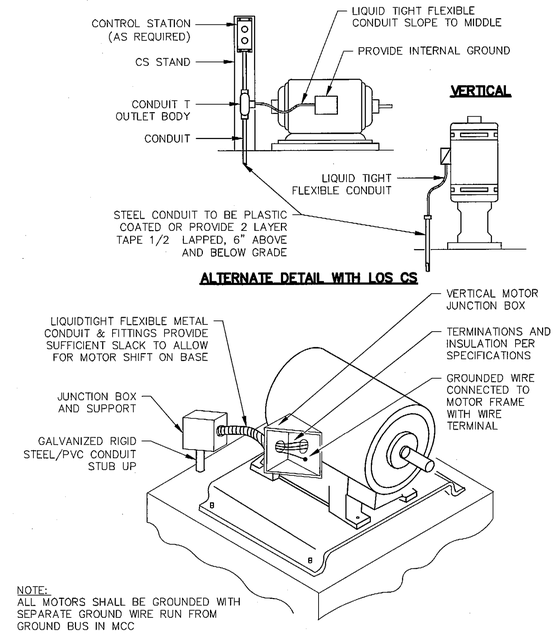

NOTE:
ALL MOTORS SHALL BE GROUNDED WITH SEPARATE GROUND WIRE RUN FROM GROUND BUS IN MCC

P E8 TYPICAL MOTOR CONNECTION DETAIL
Scale: NOT TO SCALE

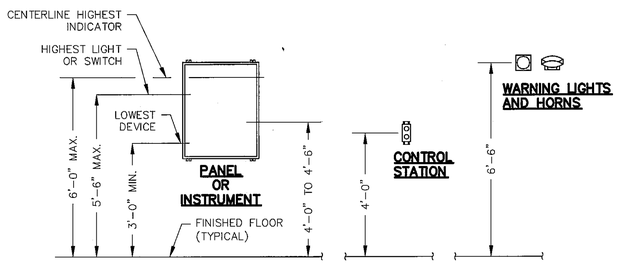

NOTES:

1. INCREASE SIZE AND NUMBER OF SUPPORTS AS NEEDED TO MEET SEISMIC REQUIREMENTS. SEE SPECIFICATIONS.

R E8 TYPICAL WALL MOUNT EQUIPMENT HEIGHT DETAIL
Scale: NOT TO SCALE

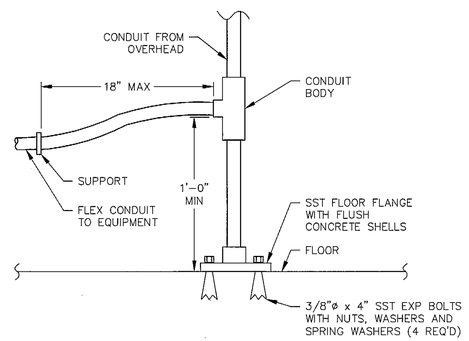

S E8 TYPICAL WALL-MOUNT EQUIPMENT HEIGHT DETAIL
Scale: NOT TO SCALE

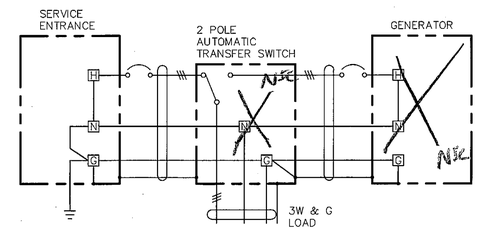

T E8 NON-SEPERATELY DERIVED GROUND SYSTEM
Scale: NOT TO SCALE

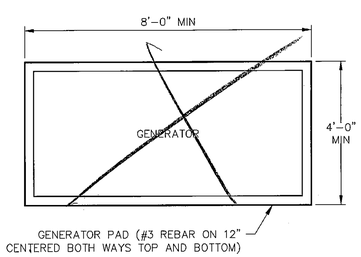

U E8 GENERATOR PAD DETAIL
Scale: NOT TO SCALE
NEC

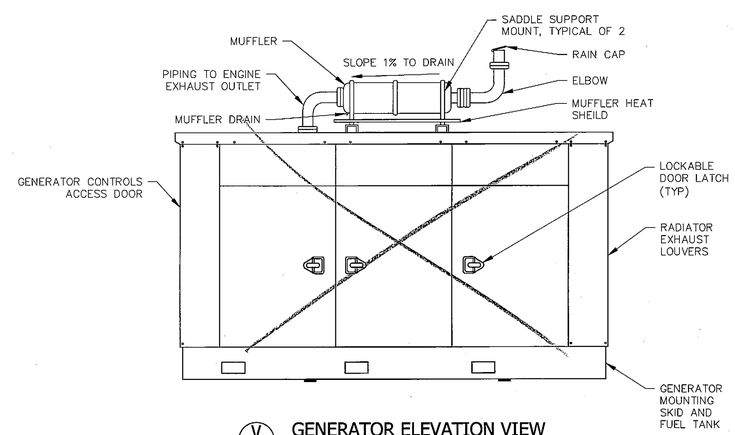

V E8 GENERATOR ELEVATION VIEW
Scale: NOT TO SCALE
NEC

REV	DATE	REVISIONS	INITIAL
	2-25-16		

WATER SYSTEM IMPROVEMENTS - 2015

ELECTRICAL DETAILS 2

WASHINGTON COUNTY WATER DISTRICT

NEVADA COUNTY CALIFORNIA

Sauers Engineering, Inc.
Civil & Environmental Engineers
440A Lower Grass Valley Rd., Nevada City, CA 95959 (530) 265-6021

ECS Engineering, Inc.
Electrical & Control Systems Engineering
Office: (916) 784-6686
ssutterry@earthlink.net

0 1
BAR IS ONE INCH ON ORIG. DRAWING
IF BAR DOES NOT MEASURE ONE INCH, ADJUST SCALES ACCORDINGLY

PROJECT NUMBER:	14-001-02
DESIGN BY:	KSK
DRAFTING BY:	KEM
CHECKED BY:	DDM

FILE PATH: seiwashington\2015wtp&tank

DATE: SEPTEMBER 2015

SCALES:
HORIZONTAL
VERTICAL

E8

SHEET: 18 of 18